PRD - PRU Series

Powered Roof Ventilators

TECHNICAL SPECIFICATIONS

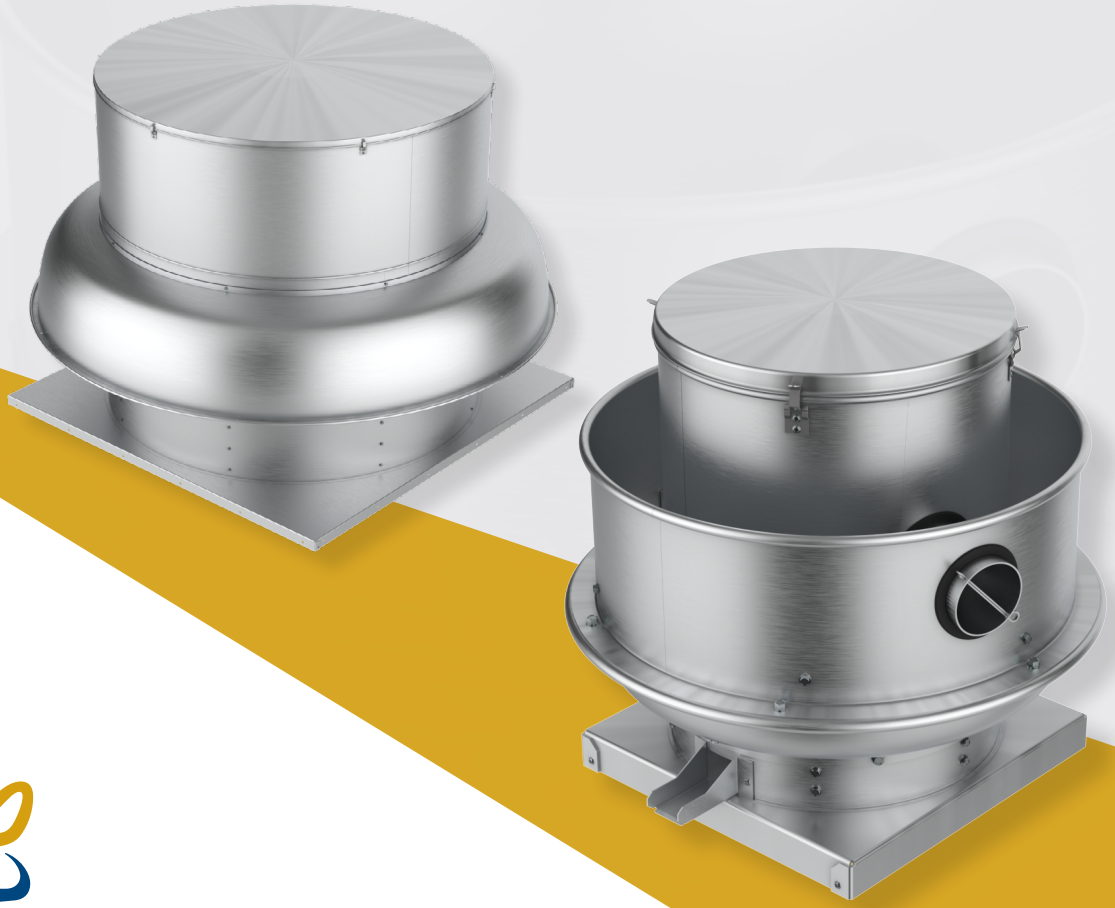

PENNBARRY™

BULLETIN PRV24

TABLE OF CONTENTS

INTRODUCTION 5
CERTIFICATIONS & LISTINGS 5
DIMENSIONAL DATA - PRD 6
DIMENSIONAL DATA - PRU 7
PRU 060-100 BELT DRIVE 8
PRU 070-100 BELT DRIVE 8
PRU 080-100 BELT DRIVE 9
PRU 100-100 BELT DRIVE 9
PRU 122-100 BELT DRIVE 10
PRU 135-100 BELT DRIVE 10
PRU 135-80 BELT DRIVE 11
PRU 150-100 BELT DRIVE 11
PRU 150-80 BELT DRIVE 12
PRU 150-050 BELT DRIVE 12
PRU 165-100 BELT DRIVE 13
PRU 165-80 BELT DRIVE 13
PRU 165-050 BELT DRIVE 14
PRU 182-100 BELT DRIVE 14
PRU 182-080 BELT DRIVE 15
PRU 182-050 BELT DRIVE 15
PRU 200-100 BELT DRIVE 16
PRU 200-080 BELT DRIVE 16
PRU 200-050 BELT DRIVE 17
PRU 222-100 BELT DRIVE 17
PRU 222-080 BELT DRIVE 18
PRU 222-050 BELT DRIVE 18
PRU 245-100 BELT DRIVE 19
PRD 245-080 BELT DRIVE 19
PRU 245-050 BELT DRIVE 20
PRU 245-030 BELT DRIVE 20
PRU 270-100 BELT DRIVE 21
PRU 270-080 BELT DRIVE 21
PRU 270-050 BELT DRIVE 22
PRU 270-030 BELT DRIVE 22
PRU 300-100 BELT DRIVE 23
PRU 300-080 BELT DRIVE 23
PRU 300-050 BELT DRIVE 24
PRU 300-030 BELT DRIVE 24
PRU 330-100 BELT DRIVE 25
PRU 330-080 BELT DRIVE 25
PRU 330-050 BELT DRIVE 26
PRU 330-030 BELT DRIVE 26
PRU 365-100 BELT DRIVE 27
PRU 365-080 BELT DRIVE 27
PRU 365-050 BELT DRIVE 28
PRU 365-030 BELT DRIVE 28
PRU 402-100 BELT DRIVE 29
PRU 402-080 BELT DRIVE 29
PRU 402-050 BELT DRIVE 30
PRU 402-030 BELT DRIVE 30
PRU 445-100 BELT DRIVE 31
PRU 445-80 BELT DRIVE 31
PRU 445-050 BELT DRIVE 32
PRU 445-30 BELT DRIVE 32
PRU 490-100 BELT DRIVE 33
PRU 490-80 BELT DRIVE 33
PRU 490-050 BELT DRIVE 34
PRU 490-30 BELT DRIVE 34
PRU 542-100 BELT DRIVE 35
PRU 542-80 BELT DRIVE 35
PRU 542-050 BELT DRIVE 36
PRU 542-30 BELT DRIVE 36
PRD 060-100 BELT DRIVE 37
PRD 070-100 BELT DRIVE 37

TABLE OF CONTENTS

PRD 080-100 BELT DRIVE 38
PRD 100-100 BELT DRIVE 38
PRD 122-100 BELT DRIVE 39
PRD 135-100 BELT DRIVE 39
PRD 135-080 BELT DRIVE 40
PRD 150-100 BELT DRIVE 40
PRD 150-080 BELT DRIVE 41
PRD 150-050 BELT DRIVE 41
PRD 165-100 BELT DRIVE 42
PRD 165-080 BELT DRIVE 42
PRD 165-050 BELT DRIVE 43
PRD 182-100 BELT DRIVE 43
PRD 182-080 BELT DRIVE 44
PRD 182-050 BELT DRIVE 44
PRD 200-100 BELT DRIVE 45
PRD 200-080 BELT DRIVE 45
PRD 200-050 BELT DRIVE 46
PRD 222-100 BELT DRIVE 46
PRD 222-080 BELT DRIVE 47
PRD 222-050 BELT DRIVE 47
PRD 245-100 BELT DRIVE 48
PRD 245-080 BELT DRIVE 48
PRD 245-050 BELT DRIVE 49
PRD 245-030 BELT DRIVE 49
PRD 270-100 BELT DRIVE 50
PRD 270-080 BELT DRIVE 50
PRD 270-050 BELT DRIVE 51
PRD 270-030 BELT DRIVE 51
PRD 300-100 BELT DRIVE 52
PRD 300-080 BELT DRIVE 52
PRD 300-050 BELT DRIVE 53
PRD 300-030 BELT DRIVE 53
PRD 330-100 BELT DRIVE 54
PRD 330-080 BELT DRIVE 54
PRD 330-050 BELT DRIVE 55
PRD 330-030 BELT DRIVE 55
PRD 365-100 BELT DRIVE 56
PRD 365-080 BELT DRIVE 56
PRD 365-050 BELT DRIVE 57
PRD 365-030 BELT DRIVE 57
PRD 402-100 BELT DRIVE 58
PRD 402-080 BELT DRIVE 58
PRD 402-050 BELT DRIVE 59
PRD 402-030 BELT DRIVE 59
PRD 445-100 BELT DRIVE 60
PRD 445-080 BELT DRIVE 60
PRD 445-050 BELT DRIVE 61
PRD 445-030 BELT DRIVE 61
PRD 490-100 BELT DRIVE 62
PRD 490-080 BELT DRIVE 62
PRD 490-050 BELT DRIVE 63
PRD 490-030 BELT DRIVE 63
PRD 542-100 BELT DRIVE 64
PRD 542-080 BELT DRIVE 64
PRD 542-050 BELT DRIVE 65
PRD 542-030 BELT DRIVE 65
PRU 060-100 DIRECT DRIVE 66
PRU 070-100 DIRECT DRIVE 66
PRU 080-100 DIRECT DRIVE 66
PRU 100-100 DIRECT DRIVE 67
PRU 122-100 DIRECT DRIVE 67
PRU 135-100 DIRECT DRIVE 68
PRU 135-080 DIRECT DRIVE 68
PRU 150-100 DIRECT DRIVE 69

TABLE OF CONTENTS

PRU 150-080 DIRECT DRIVE 69
PRU 150-050 DIRECT DRIVE 70
PRU 165-100 DIRECT DRIVE 70
PRU 165-080 DIRECT DRIVE 71
PRU 165-050 DIRECT DRIVE 71
PRU 182-100 DIRECT DRIVE 72
PRU 182-080 DIRECT DRIVE 72
PRU 182-050 DIRECT DRIVE 73
PRU 200-100 DIRECT DRIVE 73
PRU 200-080 DIRECT DRIVE 73
PRU 200-050 DIRECT DRIVE 74
PRU 222-100 DIRECT DRIVE 74
PRU 222-080 DIRECT DRIVE 74
PRU 222-050 DIRECT DRIVE 75
PRU 245-100 DIRECT DRIVE 75
PRU 245-080 DIRECT DRIVE 75
PRU 245-050 DIRECT DRIVE 76
PRU 245-030 DIRECT DRIVE 76
PRU 270-100 DIRECT DRIVE 76
PRU 270-080 DIRECT DRIVE 77
PRU 270-050 DIRECT DRIVE 77
PRU 270-030 DIRECT DRIVE 77
PRU 300-100 DIRECT DRIVE 78
PRU 300-080 DIRECT DRIVE 78
PRU 300-050 DIRECT DRIVE 78
PRU 300-030 DIRECT DRIVE 79
PRD 060-100 DIRECT DRIVE 79
PRD 070-100 DIRECT DRIVE 79
PRD 080-100 DIRECT DRIVE 80
PRD 100-100 DIRECT DRIVE 80
PRD 122-100 DIRECT DRIVE 80
PRD 135-100 DIRECT DRIVE 81
PRD 135-080 DIRECT DRIVE 81
PRD 150-100 DIRECT DRIVE 82
PRD 150-080 DIRECT DRIVE 82
PRD 150-050 DIRECT DRIVE 83
PRD 165-100 DIRECT DRIVE 83
PRD 165-080 DIRECT DRIVE 84
PRD 165-050 DIRECT DRIVE 84
PRD 182-100 DIRECT DRIVE 85
PRD 182-080 DIRECT DRIVE 85
PRD 182-050 DIRECT DRIVE 86
PRD 200-100 DIRECT DRIVE 86
PRD 200-080 DIRECT DRIVE 86
PRD 200-050 DIRECT DRIVE 87
PRD 222-100 DIRECT DRIVE 87
PRD 222-080 DIRECT DRIVE 87
PRD 222-050 DIRECT DRIVE 88
PRD 245-100 DIRECT DRIVE 88
PRD 245-080 DIRECT DRIVE 88
PRD 245-050 DIRECT DRIVE 89
PRD 245-030 DIRECT DRIVE 89
PRD 270-100 DIRECT DRIVE 89
PRD 270-080 DIRECT DRIVE 90
PRD 270-050 DIRECT DRIVE 90
PRD 270-030 DIRECT DRIVE 90
PRD 300-100 DIRECT DRIVE 90
PRD 300-080 DIRECT DRIVE 91
PRD 300-050 DIRECT DRIVE 91
PRD 300-030 DIRECT DRIVE 91

INTRODUCTION

PRD - PRU Series Porwered Roof Ventilators

Powered Roof Ventilators - Downblast (PRD) are designed for roof mounted installations in low to medium pressure applications. PRD fans are ideal for general purpose exhaust applications including: bathrooms, garages, general kitchen areas, offices, churches, dormitories, factories, large warehouses and other relatively clean air applications.

Powered Roof Ventilators - Upblast (PRU) are designed for medium to high pressure applications. While suitable for general ventilation, PRU fans are specially designed to discharge contaminated or grease-laden air or heat/smoke up and away from building surfaces. Additionally, the heat & smoke configuration is used in case of emergencies or high-temperature exhaust applications.

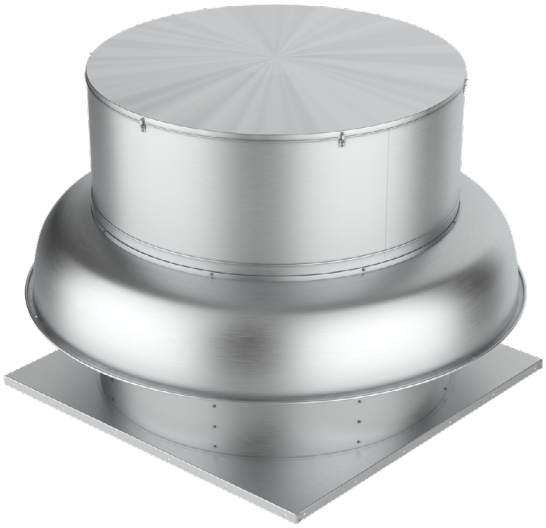

CERTIFICATIONS & LISTINGS

PRD - PRUD Series Fans

PennBarry certifies that the PRD - PRU models shown herein are licensed to bear the AMCA seal. The ratings shown are based on tests and procedures performed in accordance with AMCA publication 211 and AMCA publication 311 and comply with the requirements of the AMCA Certified Ratings Program.

UL and cULus Certification

PRD - PRU fans carry the UL label, UL705, (ZACT/ZACT7), file #E28413
PRU fans with Restaurant Exhaust option carry the UL label, UL762 (YZHW/ YZHW7), file #MH10684. PRU fans with the heat and smoke removal option carry the UL label UL793 (ZAXH/ZAXH7), file #MH19473

DIMENSIONAL DATA - PRD

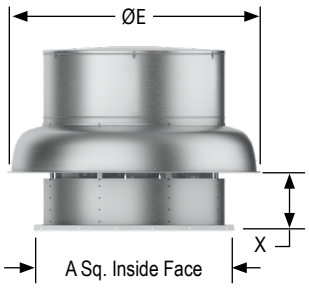

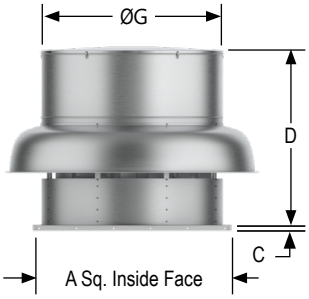

Sizes	X	E	D	G	A	C
060	2″ (5)	25 1/4″ (64)	21 1/2″ (55)	16 1/4″ (41)	17 1/8″ (43.5)	1 13/16″ (4.5)
070	2″ (5)	25 1/4″ (64)	21 1/2″ (55)	16 1/4″ (41)	17 1/8″ (43.5)	1 13/16″ (4.5)
080	2″ (5)	25 1/4″ (64)	21 1/2″ (55)	16 1/4″ (41)	17 1/8″ (43.5)	1 13/16″ (4.5)
100	2″ (5)	25 1/4″ (64)	21 1/2″ (55)	16 1/4″ (41)	17 1/8″ (43.5)	1 13/16″ (4.5)
122	2 1/2″ (6.5)	30 1/4″ (77)	24 1/2″ (62)	19 3/4″ (50)	21″ (53.5)	1 13/16″ (4.5)
135	3 5/16″ (8.5)	30 1/4″ (77)	25 5/16″ (64)	19 3/4″ (50)	21″ (53.5)	1 13/16″ (4.5)
150	3 3/4″ (9.5)	33 1/4″ (84.5)	26 1/4″ (67)	21 7/8″ (55.5)	23 3/8″ (59.3)	1 13/16″ (4.5)
165	4 3/16″ (10.5)	36 1/4″ (92)	29″ (73.5)	24 1/8″ (61)	25 5/8″ (65)	1 13/16″ (4.5)
182	4 5/8″ (12)	39 3/4″ (101)	32 9/16″ (83)	26 5/8″ (67.5)	28 3/8″ (72)	1 13/16″ (4.5)
200	5″ (13)	43 1/4″ (110)	33 13/16″ (86)	29 1/8″ (74)	31 1/8″ (79)	1 13/16″ (4.5)
222	5 3/4″ (14.5)	47 3/4″ (121)	35 7/8″ (91)	32 1/4″ (82)	34 9/16″ (88)	1 13/16″ (4.5)
245	7 1/8″ (18)	47 3/4″ (121)	37 5/16″ (95)	32 1/4″ (82)	34 9/16″ (88)	1 13/16″ (4.5)
270	7 7/8″ (20)	52 3/8″ (133)	39 3/4″ (101)	35 1/2″ (90)	38 1/4″ (97)	1 13/16″ (4.5)
300	8 3/4″ (24)	57 3/4″ (146.5)	41 3/4″ (106)	39 3/8″ (100)	42 1/2″ (108)	1 13/16″ (4.5)
330	9 9/16″ (24)	63 1/4″ (160.5)	43 7/8″ (111.5)	43 3/8″ (110)	46 5/8″ (118.5)	1 7/8″ (5)
365	10 5/8″ (27)	69 11/16″ (177)	46 1/2″ (118)	47 7/8″ (121.5)	51 5/8″ (131)	1 7/8″ (5)
402	11 3/4″ (30)	76 7/16″ (194)	48 15/16″ (124.5)	52 3/4″ (134)	56 7/8″ (144.5)	1 7/8″ (5)
445	14 5/8″ (37)	71 1/4″ (181)	51 9/16″ (131)	51 1/8″ (130)	55 1/4″ (140.5)	1 7/8″ (5)
490	16 1/8″ (41)	78 1/8″ (198.5)	57 1/4″ (145.5)	56 1/4″ (143)	60 3/4″ (154.5)	1 7/8″ (5)
542	17 13/16″ (45)	86 1/4″ (219)	60 3/4″ (154.5)	62 1/4″ (158)	67 3/8″ (171)	1 7/8″ (5)

NOTE: - Dimensions in parenthesis ( ) indicate Centimeter

DIMENSIONAL DATA - PRU

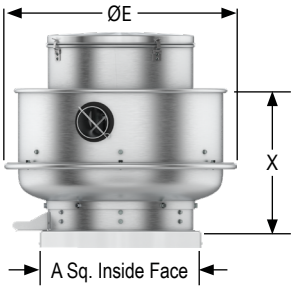

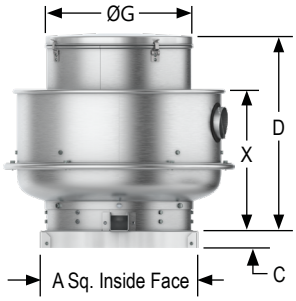

Sizes	X	E	D	G	A	C
060	**14 15/16″** (38)	**25 1/4″** (64)	**21 1/2″** (55)	**16 1/4″** (41)	**17 1/8″** (43.5)	**1 13/16″** (4.5)
070	**14 15/16″** (38)	**25 1/4″** (64)	**21 1/2″** (55)	**16 1/4″** (41)	**17 1/8″** (43.5)	**1 13/16″** (4.5)
080	**14 15/16″** (38)	**25 1/4″** (64)	**21 1/2″** (55)	**16 1/4″** (41)	**17 1/8″** (43.5)	**1 13/16″** (4.5)
100	**14 15/16″** (38)	**25 1/4″** (64)	**21 1/2″** (55)	**16 1/4″** (41)	**17 1/8″** (43.5)	**1 13/16″** (4.5)
122	**18 1/8″** (46)	**30 1/4″** (77)	**24 1/2″** (62)	**19 3/4″** (50)	**21″** (53.5)	**1 13/16″** (4.5)
135	**19 1/4″** (49)	**30 1/4″** (77)	**25 5/16″** (64)	**19 3/4″** (50)	**21″** (53.5)	**1 13/16″** (4.5)
150	**20 3/4″** (53)	**33 1/4″** (84.5)	**26 1/4″** (67)	**21 7/8″** (55.5)	**23 3/8″** (59.3)	**1 13/16″** (4.5)
165	**21 3/4″** (55)	**36 1/4″** (92)	**29″** (73.5)	**24 1/8″** (61)	**25 5/8″** (65)	**1 13/16″** (4.5)
182	**24 1/16″** (61)	**39 3/4″** (101)	**32 9/16″** (83)	**26 5/8″** (67.5)	**28 3/8″** (72)	**1 13/16″** (4.5)
200	**25 1/16″** (63.5)	**43 1/4″** (110)	**33 13/16″** (86)	**29 1/8″** (74)	**31 1/8″** (79)	**1 13/16″** (4.5)
222	**27 15/16″** (71)	**47 3/4″** (121)	**35 7/8″** (91)	**32 1/4″** (82)	**34 9/16″** (88)	**1 13/16″** (4.5)
245	**29 15/16″** (76)	**47 3/4″** (121)	**37 5/16″** (95)	**32 1/4″** (82)	**34 9/16″** (88)	**1 13/16″** (4.5)
270	**33 1/4″** (84.5)	**52 3/8″** (133)	**39 3/4″** (101)	**35 1/2″** (90)	**38 1/4″** (97)	**1 13/16″** (4.5)
300	**34 1/4″** (87)	**57 3/4″** (146.5)	**41 3/4″** (106)	**39 3/8″** (100)	**42 1/2″** (108)	**1 13/16″** (4.5)
330	**37 7/8″** (96)	**63 1/4″** (160.5)	**43 7/8″** (111.5)	**43 3/8″** (110)	**46 5/8″** (118.5)	**1 7/8″** (5)
365	**40 1/8″** (102)	**69 5/8″** (177)	**46 1/2″** (118)	**47 7/8″** (121.5)	**51 5/8″** (131)	**1 7/8″** (5)
402	**41 11/16″** (106)	**76 7/16″** (194)	**48 15/16″** (124.5)	**52 3/4″** (134)	**56 7/8″** (144.5)	**1 7/8″** (5)
445	**45 3/8″** (115.5)	**71 1/4″** (181)	**51 9/16″** (131)	**51 1/8″** (130)	**55 1/4″** (140.5)	**1 7/8″** (5)
490	**49″** (124.5)	**78 1/8″** (198.5)	**57 1/4″** (145.5)	**56 1/4″** (143)	**60 3/4″** (154.5)	**1 7/8″** (5)
542	**53 7/16″** (136)	**86 1/4″** (219)	**60 3/4″** (154.5)	**62 1/4″** (158)	**67 3/8″** (171)	**1 7/8″** (5)

PRU 060-100 BELT DRIVE

RPM	Tip Speed	Max Sones	0.00"SP		0.12"SP		0.25"SP		0.38"SP		0.50"SP		0.62"SP		0.75"SP		0.88"SP		1.00"SP		1.12"SP		1.25"SP	
			CFM		CFM		CFM		CFM		CFM		CFM		CFM		CFM		CFM		CFM		CFM	
			BHP	FEI	BHP	FEI	BHP	FEI	BHP	FEI	BHP	FEI	BHP	FEI	BHP	FEI	BHP	FEI	BHP	FEI	BHP	FEI	BHP	FEI
700	1833	2.0	110		30																			
			0.01	0.40	0.01	0.40																		
861	2255	3.4	137		84																			
			0.01	0.65	0.01	0.51																		
1023	2677	4.9	163		121		63																	
			0.02	1.21	0.02	1.29	0.02	1.30																
1184	3100	6.8	190		155		113																	
			0.03	1.20	0.03	1.35	0.03	1.43																
1345	3522	8.6	216		186		155		119		65													
			0.04	1.06	0.04	1.18	0.04	1.29	0.04	1.36	0.04	1.43												
1507	3944	10.5	241		216		189		158		123		77											
			0.06	0.92	0.06	0.99	0.06	1.12	0.06	1.22	0.06	1.28	0.05	1.34										
1668	4367	12.6	266		243		220		195		167		135		94									
			0.08	0.78	0.09	0.83	0.09	0.95	0.08	1.05	0.08	1.13	0.08	1.18	0.08	1.24								
1829	4789	15.2	291		270		246		225		199		171		138									
			0.11	0.67	0.11	0.76	0.11	0.85	0.11	0.93	0.10	1.01	0.10	1.07	0.10	1.11								
1991	5212	17.9	317		296		276		255		235		212		186									
			0.14	0.57	0.14	0.65	0.14	0.74	0.14	0.81	0.14	0.88	0.13	0.94	0.13	0.99								
2152	5634	21	342		323		304		287		268		245		223									
			0.17	0.49	0.17	0.57	0.17	0.64	0.17	0.70	0.17	0.77	0.17	0.83	0.17	0.88								
Maximum RPM 2152					Max HP: 0.25				Outlet Area (Sq.Ft.): 1.32				Wheel Diameter (in): 10				Tip Speed: 2.62 x RPM				Max Motor Frame Size: 48			

Performance certified is for installation type A: Free inlet, Free outlet. Power rating (Bhp) does not include transmission losses. Performance ratings do not include the effects of appurtenances. The sound ratings shown are loudness values in fan sones at 5 ft. (1.5 m) in a hemispherical free field calculated per AMCA Standard 301. Values shown are for installation type A: Free inlet hemispherical sone levels. FEI calculation is based on default motor calculation in accordance with ANS/AMCA Standard 208.

PRU 070-100 BELT DRIVE

RPM	Tip Speed	Max Sones	0.00"SP		0.12"SP		0.25"SP		0.38"SP		0.50"SP		0.62"SP		0.75"SP		0.88"SP		1.00"SP		1.12"SP		1.25"SP	
			CFM		CFM		CFM		CFM		CFM		CFM		CFM		CFM		CFM		CFM		CFM	
			BHP	FEI	BHP	FEI	BHP	FEI	BHP	FEI	BHP	FEI	BHP	FEI	BHP	FEI	BHP	FEI	BHP	FEI	BHP	FEI	BHP	FEI
700	1833	2.3	211		88																			
			0.01	0.45	0.01	0.44																		
861	2255	3.6	261		179																			
			0.01	1.09	0.01	1.17																		
1023	2677	5.1	312		250		148																	
			0.02	1.44	0.02	1.57	0.02	1.56																
1184	3100	7.0	362		309		242		113															
			0.03	1.37	0.03	1.54	0.03	1.61	0.03	1.58														
1345	3522	8.7	413		369		317		250		139													
			0.05	1.21	0.05	1.36	0.05	1.47	0.05	1.53	0.04	1.54												
1507	3944	10.6	463		424		376		324		256		143											
			0.07	1.06	0.07	1.23	0.07	1.33	0.07	1.40	0.07	1.44	0.06	1.46										
1668	4367	12.7	514		477		436		390		340		274		166									
			0.09	0.92	0.09	1.10	0.09	1.19	0.09	1.27	0.09	1.32	0.09	1.36	0.08	1.37								
1829	4789	15.3	564		532		501		460		418		373		314		241							
			0.12	0.79	0.12	0.90	0.13	1.00	0.13	1.10	0.13	1.17	0.13	1.22	0.13	1.25	0.12	1.27						
1991	5212	18.0	614		584		555		520		485		445		401		351							
			0.16	0.68	0.16	0.79	0.16	0.88	0.16	0.97	0.16	1.04	0.16	1.10	0.16	1.14	0.16	1.17						
2152	5634	21	664		637		610		578		546		514		476		433							
			0.20	0.59	0.20	0.68	0.20	0.77	0.21	0.85	0.21	0.92	0.21	0.98	0.21	1.03	0.21	1.08						
Maximum RPM 2152					Max HP: 0.25				Outlet Area (Sq.Ft.): 1.32				Wheel Diameter (in): 10				Tip Speed: 2.62 x RPM				Max Motor Frame Size: 48			

Performance certified is for installation type A: Free inlet, Free outlet. Power rating (Bhp) does not include transmission losses. Performance ratings do not include the effects of appurtenances. The sound ratings shown are loudness values in fan sones at 5 ft. (1.5 m) in a hemispherical free field calculated per AMCA Standard 301. Values shown are for installation type A: Free inlet hemispherical sone levels. FEI calculation is based on default motor calculation in accordance with ANS/AMCA Standard 208.

PRU 080-100 BELT DRIVE

RPM	Tip Speed	Max Sones	0.00"SP		0.12"SP		0.25"SP		0.38"SP		0.50"SP		0.62"SP		0.75"SP		0.88"SP		1.00"SP		1.12"SP		1.25"SP	
			CFM		CFM		CFM		CFM		CFM		CFM		CFM		CFM		CFM		CFM		CFM	
			BHP	FEI	BHP	FEI	BHP	FEI	BHP	FEI	BHP	FEI	BHP	FEI	BHP	FEI	BHP	FEI	BHP	FEI	BHP	FEI	BHP	FEI
700	1833	2.4	266		114																			
			0.01	0.48	0.01	0.46																		
861	2255	3.8	327		234																			
			0.01	1.28	0.01	1.36																		
1023	2677	5.4	388		316		193																	
			0.02	1.54	0.02	1.69	0.02	1.67																
1184	3100	7.2	449		387		310																	
			0.04	1.43	0.04	1.62	0.04	1.70																
1345	3522	8.9	511		462		404		330		195													
			0.05	1.27	0.06	1.40	0.06	1.52	0.06	1.60	0.05	1.60												
1507	3944	10.7	575		535		489		433		360		254											
			0.07	1.11	0.08	1.19	0.08	1.34	0.08	1.44	0.08	1.51	0.07	1.52										
1668	4367	13.0	638		606		565		519		468		401		315		165							
			0.10	0.96	0.12	0.98	0.11	1.16	0.11	1.27	0.11	1.36	0.11	1.42	0.10	1.44	0.09	1.40						
1829	4789	15.6	700		666		627		587		542		491		429		344							
			0.13	0.83	0.13	0.95	0.14	1.07	0.14	1.16	0.14	1.24	0.14	1.30	0.14	1.34	0.13	1.36						
1991	5212	18.2	762		731		700		663		620		577		528		473							
			0.17	0.72	0.17	0.83	0.17	0.92	0.18	1.02	0.18	1.11	0.18	1.17	0.18	1.23	0.18	1.26						
2152	5634	21	824		797		764		731		697		657		617		577							
			0.21	0.62	0.22	0.72	0.22	0.82	0.22	0.91	0.23	0.98	0.23	1.06	0.23	1.11	0.23	1.15						
Maximum RPM 2152					Max HP: 0.25				Outlet Area (Sq.Ft.): 1.32				Wheel Diameter (in): 10				Tip Speed: 2.62 x RPM				Max Motor Frame Size: 48			

Performance certified is for installation type A: Free inlet, Free outlet. Power rating (Bhp) does not include transmission losses. Performance ratings do not include the effects of appurtenances. The sound ratings shown are loudness values in fan sones at 5 ft. (1.5 m) in a hemispherical free field calculated per AMCA Standard 301. Values shown are for installation type A: Free inlet hemispherical sone levels. FEI calculation is based on default motor calculation in accordance with ANS/AMCA Standard 208.

PRU 100-100 BELT DRIVE

RPM	Tip Speed	Max Sones	0.00"SP		0.12"SP		0.25"SP		0.38"SP		0.50"SP		0.62"SP		0.75"SP		0.88"SP		1.00"SP		1.12"SP		1.25"SP	
			CFM		CFM		CFM		CFM		CFM		CFM		CFM		CFM		CFM		CFM		CFM	
			BHP	FEI	BHP	FEI	BHP	FEI	BHP	FEI	BHP	FEI	BHP	FEI	BHP	FEI	BHP	FEI	BHP	FEI	BHP	FEI	BHP	FEI
700	1833	2.6	380		195																			
			0.01	1.12	0.01	0.51																		
848	2220	3.9	462		340																			
			0.02	1.66	0.02	1.62																		
996	2608	6.4	544		450		320																	
			0.03	1.62	0.02	1.96	0.03	1.94																
1144	2995	8.0	626		553		467																	
			0.05	1.44	0.04	1.92	0.04	2.03																
1292	3382	9.6	712		646		580		493		293													
			0.07	1.29	0.06	1.65	0.06	1.84	0.06	1.88	0.05	1.82												
1440	3770	11.4	800		737		675		604		513													
			0.09	1.16	0.08	1.43	0.08	1.59	0.08	1.69	0.08	1.72												
1588	4157	13.3	888		826		763		706		634		540											
			0.11	1.03	0.10	1.27	0.11	1.39	0.11	1.49	0.11	1.56	0.11	1.59										
1736	4545	15.4	976		921		866		810		755		684		597		448							
			0.14	0.92	0.15	1.03	0.15	1.15	0.16	1.26	0.16	1.35	0.16	1.43	0.16	1.47	0.14	1.46						
1884	4932	17.5	1059		1008		957		905		854		802		734		657							
			0.18	0.80	0.19	0.91	0.20	1.02	0.20	1.12	0.20	1.21	0.20	1.29	0.20	1.35	0.20	1.39						
2032	5320	18.7	1143		1096		1041		995		949		902		856		792							
			0.23	0.70	0.24	0.80	0.25	0.92	0.25	1.01	0.25	1.10	0.25	1.17	0.26	1.23	0.26	1.29						
Maximum RPM 2032					Max HP: 0.25				Outlet Area (Sq.Ft.): 1.32				Wheel Diameter (in): 10				Tip Speed: 2.62 x RPM				Max Motor Frame Size: 48			

Performance certified is for installation type A: Free inlet, Free outlet. Power rating (Bhp) does not include transmission losses. Performance ratings do not include the effects of appurtenances. The sound ratings shown are loudness values in fan sones at 5 ft. (1.5 m) in a hemispherical free field calculated per AMCA Standard 301. Values shown are for installation type A: Free inlet hemispherical sone levels. FEI calculation is based on default motor calculation in accordance with ANS/AMCA Standard 208.

PRU 122-100 BELT DRIVE

RPM	Tip Speed	Max Sones	0.00"SP		0.12"SP		0.25"SP		0.38"SP		0.50"SP		0.62"SP		0.75"SP		0.88"SP		1.00"SP		1.12"SP		1.25"SP	
			CFM		CFM		CFM		CFM		CFM		CFM		CFM		CFM		CFM		CFM		CFM	
			BHP	FEI	BHP	FEI	BHP	FEI	BHP	FEI	BHP	FEI	BHP	FEI	BHP	FEI	BHP	FEI	BHP	FEI	BHP	FEI	BHP	FEI
700	2245	4.2	701		522																			
			0.03	1.85	0.02	2.09																		
827	2653	5.7	831		694		518																	
			0.05	1.62	0.04	2.12	0.04	2.05																
954	3061	7.7	961		855		732		521															
			0.08	1.36	0.06	1.91	0.06	2.03	0.06	1.89														
1082	3469	10.8	1098		999		899		781		564													
			0.11	1.20	0.09	1.55	0.09	1.73	0.10	1.77	0.09	1.70												
1209	3877	12.7	1237		1138		1050		951		826		592											
			0.14	1.07	0.13	1.32	0.13	1.46	0.14	1.55	0.14	1.59	0.13	1.54										
1336	4285	14.8	1376		1275		1194		1102		1001		881		659									
			0.19	0.94	0.17	1.16	0.18	1.26	0.19	1.35	0.19	1.42	0.19	1.45	0.18	1.42								
1463	4693	17.0	1512		1431		1350		1269		1188		1097		985		823							
			0.24	0.82	0.25	0.93	0.26	1.04	0.26	1.14	0.26	1.23	0.26	1.29	0.26	1.34	0.25	1.34						
1591	5101	19.4	1644		1567		1490		1423		1346		1269		1181		1082							
			0.31	0.71	0.32	0.81	0.33	0.92	0.33	1.01	0.34	1.09	0.34	1.16	0.34	1.22	0.34	1.26						
1718	5509	22	1775		1704		1633		1561		1502		1430		1359		1275							
			0.39	0.61	0.40	0.71	0.41	0.81	0.42	0.90	0.42	0.97	0.42	1.05	0.43	1.11	0.43	1.16						
1845	5917	25	1907		1843		1779		1715		1651		1587		1523		1447							
			0.48	0.54	0.49	0.62	0.50	0.71	0.51	0.79	0.52	0.87	0.52	0.94	0.53	1.00	0.53	1.06						
Maximum RPM 1845					Max HP: 0.50				Outlet Area (Sq.Ft.): 1.99				Wheel Diameter (in): 12.25				Tip Speed: 3.21 x RPM				Max Motor Frame Size: 56			

Performance certified is for installation type A: Free inlet, Free outlet. Power rating (Bhp) does not include transmission losses. Performance ratings do not include the effects of appurtenances. The sound ratings shown are loudness values in fan sones at 5 ft. (1.5 m) in a hemispherical free field calculated per AMCA Standard 301. Values shown are for installation type A: Free inlet hemispherical sone levels. FEI calculation is based on default motor calculation in accordance with ANS/AMCA Standard 208.

PRU 135-100 BELT DRIVE

RPM	Tip Speed	Max Sones	0.00"SP		0.12"SP		0.25"SP		0.50"SP		0.62"SP		0.75"SP		0.88"SP		1.00"SP		1.25"SP		1.38"SP		1.50"SP	
			CFM		CFM		CFM		CFM		CFM		CFM		CFM		CFM		CFM		CFM		CFM	
			BHP	FEI	BHP	FEI	BHP	FEI	BHP	FEI	BHP	FEI	BHP	FEI	BHP	FEI	BHP	FEI	BHP	FEI	BHP	FEI	BHP	FEI
547	1933	2.9	721		467																			
			0.01	1.81	0.02	1.93																		
691	2443	4.7	925		752																			
			0.03	2.18	0.04	2.25																		
835	2953	6.7	1131		992		827																	
			0.06	1.86	0.06	2.02	0.07	2.03																
980	3462	9.0	1338		1215		1090																	
			0.10	1.50	0.10	1.72	0.11	1.79																
1124	3972	11.9	1545		1442		1339		1060		791													
			0.15	1.21	0.14	1.46	0.15	1.54	0.17	1.64	0.16	1.58												
1268	4482	14.4	1754		1665		1581		1373		1247		1064											
			0.21	0.99	0.22	1.16	0.23	1.27	0.24	1.45	0.25	1.49	0.24	1.49										
1412	4992	16.9	1965		1890		1809		1639		1535		1418		1276		1029							
			0.30	0.82	0.28	1.02	0.31	1.11	0.33	1.28	0.34	1.35	0.34	1.39	0.34	1.41	0.32	1.37						
1557	5501	19.7	2176		2105		2031		1885		1798		1712		1610		1480		972					
			0.40	0.69	0.35	0.91	0.40	0.98	0.43	1.14	0.44	1.21	0.45	1.26	0.45	1.31	0.46	1.33	0.40	1.26				
1701	6011	23	2387		2323		2259		2131		2051		1987		1891		1811		1572		1380		932	
			0.53	0.58	0.42	0.83	0.49	0.87	0.55	1.00	0.56	1.08	0.57	1.13	0.59	1.19	0.59	1.23	0.59	1.28	0.58	1.27	0.49	1.17
1845	6521	26	2590		2538		2486		2365		2313		2243		2174		2104		1931		1844		1723	
			0.67	0.50	0.69	0.60	0.71	0.68	0.74	0.85	0.75	0.91	0.76	0.98	0.77	1.04	0.78	1.09	0.79	1.18	0.79	1.20	0.78	1.22
Maximum RPM 1845					Max HP: 1.00				Outlet Area (Sq.Ft.): 1.99				Wheel Diameter (in): 13.5				Tip Speed: 3.53 x RPM				Max Motor Frame Size: 56			

Performance certified is for installation type A: Free inlet, Free outlet. Power rating (Bhp) does not include transmission losses. Performance ratings do not include the effects of appurtenances. The sound ratings shown are loudness values in fan sones at 5 ft. (1.5 m) in a hemispherical free field calculated per AMCA Standard 301. Values shown are for installation type A: Free inlet hemispherical sone levels. FEI calculation is based on default motor calculation in accordance with ANS/AMCA Standard 208.

PRU 135-80 BELT DRIVE

RPM	Tip Speed	Max Sones	0.00"SP		0.25"SP		0.38"SP		0.62"SP		0.75"SP		1.00"SP		1.12"SP		1.38"SP		1.50"SP		1.75"SP		1.88"SP	
			CFM		CFM		CFM		CFM		CFM		CFM		CFM		CFM		CFM		CFM		CFM	
			BHP	FEI	BHP	FEI	BHP	FEI	BHP	FEI	BHP	FEI	BHP	FEI	BHP	FEI	BHP	FEI	BHP	FEI	BHP	FEI	BHP	FEI
547	1933	2.9	702																					
			0.01	1.73																				
701	2479	4.8	909		445																			
			0.03	2.15	0.03	2.19																		
856	3025	6.9	1117		832		560																	
			0.06	1.84	0.07	2.02	0.06	2.05																
1010	3571	10.1	1325		1088		948																	
			0.09	1.51	0.11	1.71	0.12	1.72																
1165	4117	12.5	1534		1319		1216		919															
			0.14	1.23	0.16	1.47	0.18	1.49	0.18	1.56														
1319	4663	15.1	1741		1569		1476		1289		1160													
			0.21	0.98	0.25	1.18	0.27	1.26	0.29	1.35	0.29	1.39												
1474	5209	17.9	1947		1799		1721		1565		1474		1238		1029									
			0.31	0.78	0.36	0.95	0.37	1.06	0.39	1.21	0.39	1.26	0.39	1.34	0.36	1.36								
1628	5755	21	2153		2023		1952		1823		1751		1577		1475		1157							
			0.43	0.64	0.51	0.78	0.51	0.89	0.52	1.05	0.53	1.11	0.53	1.22	0.53	1.26	0.49	1.29						
1783	6301	24	2359		2252		2190		2065		2002		1860		1796		1621		1494		1034			
			0.58	0.53	0.71	0.62	0.69	0.73	0.69	0.9	0.69	0.97	0.7	1.1	0.7	1.14	0.69	1.22	0.68	1.24	0.6	1.18		
1937	6847	26	2564		2444		2393		2272		2221		2101		2032		1894		1808		1602		1448	
			0.75	0.45	0.79	0.62	0.8	0.69	0.82	0.84	0.83	0.89	0.85	1	0.85	1.06	0.86	1.13	0.86	1.17	0.85	1.2	0.83	1.2
Maximum RPM 1937.25					Max HP: 1.00				Outlet Area (Sq.Ft.): 1.99				Wheel Diameter (in): 13.5				Tip Speed: 3.53 x RPM				Max Motor Frame Size: 56			

Performance certified is for installation type A: Free inlet, Free outlet. Power rating (Bhp) does not include transmission losses. Performance ratings do not include the effects of appurtenances. The sound ratings shown are loudness values in fan sones at 5 ft. (1.5 m) in a hemispherical free field calculated per AMCA Standard 301. Values shown are for installation type A: Free inlet hemispherical sone levels. FEI calculation is based on default motor calculation in accordance with ANS/AMCA Standard 208.

PRU 150-100 BELT DRIVE

RPM	Tip Speed	Max Sones	0.00"SP		0.12"SP		0.25"SP		0.50"SP		0.62"SP		0.75"SP		0.88"SP		1.00"SP		1.25"SP		1.38"SP		1.50"SP	
			CFM		CFM		CFM		CFM		CFM		CFM		CFM		CFM		CFM		CFM		CFM	
			BHP	FEI	BHP	FEI	BHP	FEI	BHP	FEI	BHP	FEI	BHP	FEI	BHP	FEI	BHP	FEI	BHP	FEI	BHP	FEI	BHP	FEI
547	2148	3.8	994		741																			
			0.03	2.40	0.03	2.37																		
691	2714	5.8	1277		1087		836																	
			0.05	2.07	0.06	2.17	0.06	2.11																
835	3281	8.2	1561		1408		1232																	
			0.10	1.61	0.10	1.82	0.11	1.87																
980	3847	11.0	1845		1710		1574		1205															
			0.16	1.26	0.16	1.50	0.17	1.58	0.19	1.64														
1124	4414	14.6	2130		2023		1921		1654		1488		1238											
			0.25	1.00	0.26	1.16	0.27	1.27	0.29	1.44	0.29	1.48	0.28	1.46										
1268	4980	17.4	2419		2327		2228		2018		1890		1747		1556		1235							
			0.36	0.80	0.35	1.00	0.37	1.09	0.40	1.26	0.41	1.33	0.42	1.37	0.42	1.38	0.39	1.33						
1412	5546	21	2709		2621		2529		2348		2257		2149		2023		1879		1319					
			0.51	0.66	0.45	0.89	0.50	0.96	0.54	1.11	0.56	1.17	0.57	1.23	0.57	1.27	0.58	1.30	0.53	1.24				
1557	6113	24	2998		2938		2857		2717		2616		2536		2435		2335		2074		1893		1652	
			0.69	0.55	0.70	0.64	0.73	0.75	0.75	0.91	0.77	1.00	0.78	1.06	0.79	1.12	0.80	1.16	0.80	1.23	0.79	1.23	0.76	1.21
1701	6679	27	3276		3232		3144		3012		2946		2859		2793		2705		2508		2398		2266	
			0.90	0.47	0.91	0.53	0.94	0.65	0.97	0.80	0.99	0.86	1.00	0.94	1.01	0.98	1.03	1.04	1.04	1.12	1.04	1.15	1.04	1.18
1845	7245	31	3553		3506		3434		3315		3244		3172		3101		3030		2887		2792		2696	
			1.14	0.40	1.16	0.47	1.19	0.56	1.23	0.70	1.25	0.77	1.27	0.83	1.28	0.89	1.29	0.93	1.31	1.01	1.32	1.05	1.33	1.09
Maximum RPM 1845					Max HP: 1.50				Outlet Area (Sq.Ft.): 2.46				Wheel Diameter (in): 15				Tip Speed: 3.93 x RPM				Max Motor Frame Size: 145T			

Performance certified is for installation type A: Free inlet, Free outlet. Power rating (Bhp) does not include transmission losses. Performance ratings do not include the effects of appurtenances. The sound ratings shown are loudness values in fan sones at 5 ft. (1.5 m) in a hemispherical free field calculated per AMCA Standard 301. Values shown are for installation type A: Free inlet hemispherical sone levels. FEI calculation is based on default motor calculation in accordance with ANS/AMCA Standard 208.

PRU 150-80 BELT DRIVE

RPM	Tip Speed	Max Sones	0.00"SP		0.25"SP		0.38"SP		0.62"SP		0.75"SP		1.00"SP		1.12"SP		1.38"SP		1.50"SP		1.75"SP		1.88"SP	
			CFM		CFM		CFM		CFM		CFM		CFM		CFM		CFM		CFM		CFM		CFM	
			BHP	FEI	BHP	FEI	BHP	FEI	BHP	FEI	BHP	FEI	BHP	FEI	BHP	FEI	BHP	FEI	BHP	FEI	BHP	FEI	BHP	FEI
547	2148	3.8	967																					
			0.03	2.38																				
701	2755	5.9	1251		854																			
			0.06	2.04	0.06	2.2																		
856	3361	8.4	1537		1223		1031																	
			0.1	1.63	0.12	1.8	0.12	1.8																
1010	3968	12.3	1823		1556		1422		948															
			0.16	1.28	0.18	1.5	0.2	1.52	0.18	1.6														
1165	4575	15.1	2108		1884		1785		1531		1347													
			0.25	1.01	0.29	1.2	0.31	1.26	0.34	1.34	0.33	1.38												
1319	5181	18.3	2391		2209		2113		1921		1809		1504		1215									
			0.38	0.77	0.44	0.94	0.45	1.04	0.47	1.19	0.48	1.24	0.47	1.31	0.42	1.32								
1474	5788	22	2673		2512		2424		2264		2174		1976		1850		1490							
			0.54	0.62	0.65	0.75	0.64	0.87	0.65	1.02	0.66	1.09	0.67	1.19	0.66	1.23	0.63	1.25						
1628	6394	25	2956		2823		2746		2589		2530		2351		2272		2072		1933		1514			
			0.75	0.5	0.92	0.59	0.9	0.7	0.89	0.87	0.89	0.93	0.9	1.06	0.9	1.1	0.9	1.18	0.89	1.2	0.83	1.18		
1783	7001	29	3237		3107		3020		2890		2825		2673		2608		2435		2348		2109		1958	
			0.99	0.42	1.03	0.57	1.05	0.66	1.08	0.79	1.1	0.84	1.12	0.96	1.12	1	1.13	1.09	1.14	1.12	1.13	1.16	1.11	1.17
1937	7608	32	3518		3400		3329		3188		3141		2999		2928		2811		2716		2551		2457	
			1.27	0.36	1.31	0.49	1.34	0.56	1.38	0.7	1.39	0.74	1.42	0.85	1.43	0.9	1.45	0.97	1.45	1.02	1.46	1.08	1.46	1.1
Maximum RPM 1937.25					Max HP: 1.50				Outlet Area (Sq.Ft.): 2.46				Wheel Diameter (in): 15				Tip Speed: 3.93 x RPM				Max Motor Frame Size: 145T			

Performance certified is for installation type A: Free inlet, Free outlet. Power rating (Bhp) does not include transmission losses. Performance ratings do not include the effects of appurtenances. The sound ratings shown are loudness values in fan sones at 5 ft. (1.5 m) in a hemispherical free field calculated per AMCA Standard 301. Values shown are for installation type A: Free inlet hemispherical sone levels. FEI calculation is based on default motor calculation in accordance with ANS/AMCA Standard 208.

PRU 150-050 BELT DRIVE

RPM	Tip Speed	Max Sones	0.00"SP		0.25"SP		0.50"SP		0.75"SP		1.00"SP		1.25"SP		1.38"SP		1.62"SP		1.88"SP		2.12"SP		2.38"SP	
			CFM		CFM		CFM		CFM		CFM		CFM		CFM		CFM		CFM		CFM		CFM	
			BHP	FEI	BHP	FEI	BHP	FEI	BHP	FEI	BHP	FEI	BHP	FEI	BHP	FEI	BHP	FEI	BHP	FEI	BHP	FEI	BHP	FEI
547	2148	3.3	651																					
			0.06	1.36																				
722	2835	5.6	875		549																			
			0.09	1.24	0.09	1.37																		
897	3523	8.3	1108		853		481																	
			0.11	1.22	0.11	1.48	0.11	1.37																
1072	4210	12.1	1342		1114		881		469															
			0.14	1.13	0.14	1.44	0.15	1.59	0.15	1.33														
1247	4897	15.2	1579		1387		1199		976		646													
			0.18	1.04	0.19	1.36	0.20	1.56	0.20	1.64	0.20	1.49												
1422	5584	18.6	1817		1651		1483		1304		1082		772											
			0.23	0.95	0.23	1.29	0.25	1.49	0.26	1.61	0.27	1.66	0.26	1.56										
1597	6271	22	2055		1913		1753		1594		1419		1212		1085		716							
			0.29	0.86	0.28	1.20	0.31	1.41	0.33	1.54	0.35	1.62	0.35	1.66	0.35	1.65	0.32	1.49						
1772	6959	26	2287		2179		2036		1910		1766		1605		1515		1317		1084		725			
			0.38	0.74	0.40	0.99	0.42	1.23	0.44	1.38	0.46	1.49	0.48	1.57	0.48	1.60	0.48	1.62	0.46	1.59	0.42	1.43		
1947	7646	29	2513		2414		2296		2177		2039		1921		1842		1684		1526		1329		1073	
			0.51	0.62	0.53	0.85	0.55	1.06	0.57	1.22	0.60	1.35	0.61	1.43	0.62	1.47	0.63	1.53	0.64	1.56	0.63	1.56	0.60	1.51
2122	8333	34	2739		2653		2545		2438		2309		2201		2137		2008		1879		1728		1556	
			0.66	0.53	0.68	0.72	0.70	0.92	0.73	1.07	0.75	1.22	0.78	1.31	0.79	1.35	0.81	1.42	0.82	1.47	0.83	1.50	0.82	1.52
Maximum RPM 2122					Max HP: 1.50				Outlet Area (Sq.Ft.): 2.46				Wheel Diameter (in): 15				Tip Speed: 3.93 x RPM				Max Motor Frame Size: 145T			

Performance certified is for installation type A: Free inlet, Free outlet. Power rating (Bhp) does not include transmission losses. Performance ratings do not include the effects of appurtenances. The sound ratings shown are loudness values in fan sones at 5 ft. (1.5 m) in a hemispherical free field calculated per AMCA Standard 301. Values shown are for installation type A: Free inlet hemispherical sone levels. FEI calculation is based on default motor calculation in accordance with ANS/AMCA Standard 208.

PRU 165-100 BELT DRIVE

RPM	Tip Speed	Max Sones	0.00"SP		0.12"SP		0.25"SP		0.50"SP		0.62"SP		0.75"SP		0.88"SP		1.00"SP		1.25"SP		1.38"SP		1.50"SP	
			CFM		CFM		CFM		CFM		CFM		CFM		CFM		CFM		CFM		CFM		CFM	
			BHP	FEI	BHP	FEI	BHP	FEI	BHP	FEI	BHP	FEI	BHP	FEI	BHP	FEI	BHP	FEI	BHP	FEI	BHP	FEI	BHP	FEI
427	1845	2.6	1026		597																			
			0.02	2.46	0.02	2.25																		
580	2506	5.4	1419		1173		715																	
			0.05	2.29	0.06	2.32	0.06	2.07																
733	3167	7.8	1820		1630		1413																	
			0.11	1.69	0.11	1.88	0.12	1.91																
886	3829	11.0	2221		2059		1896		1436															
			0.20	1.25	0.19	1.50	0.21	1.57	0.22	1.62														
1039	4490	15.5	2625		2510		2366		2072		1866		1592											
			0.32	0.95	0.33	1.11	0.35	1.23	0.37	1.40	0.37	1.44	0.37	1.43										
1193	5151	18.9	3034		2917		2814		2570		2429		2269		2068		1807							
			0.49	0.74	0.46	0.95	0.49	1.03	0.54	1.20	0.55	1.26	0.56	1.31	0.56	1.33	0.55	1.32						
1346	5813	23	3443		3329		3236		3028		2936		2798		2683		2522		2086		1648			
			0.71	0.59	0.61	0.83	0.68	0.88	0.75	1.03	0.77	1.08	0.78	1.15	0.79	1.19	0.80	1.23	0.79	1.25	0.73	1.18		
1499	6474	27	3842		3765		3688		3507		3430		3327		3224		3121		2864		2709		2503	
			0.99	0.48	1.01	0.58	1.04	0.67	1.08	0.83	1.09	0.89	1.11	0.96	1.12	1.02	1.13	1.06	1.15	1.15	1.15	1.17	1.14	1.18
1652	7136	31	4235		4178		4093		3951		3866		3781		3696		3610		3383		3298		3156	
			1.32	0.40	1.34	0.47	1.38	0.56	1.42	0.70	1.45	0.77	1.47	0.83	1.48	0.88	1.50	0.93	1.52	1.03	1.53	1.06	1.54	1.09
1805	7797	36	4627		4565		4503		4379		4286		4224		4131		4069		3883		3790		3697	
			1.72	0.34	1.75	0.41	1.78	0.48	1.83	0.59	1.87	0.67	1.89	0.72	1.91	0.78	1.93	0.82	1.96	0.91	1.98	0.95	1.99	0.99
Maximum RPM 1805					Max HP: 3.00				Outlet Area (Sq.Ft.): 2.94				Wheel Diameter (in): 16.5				Tip Speed: 4.32 x RPM				Max Motor Frame Size: 145T			

Performance certified is for installation type A: Free inlet, Free outlet. Power rating (Bhp) does not include transmission losses. Performance ratings do not include the effects of appurtenances. The sound ratings shown are loudness values in fan sones at 5 ft. (1.5 m) in a hemispherical free field calculated per AMCA Standard 301. Values shown are for installation type A: Free inlet hemispherical sone levels. FEI calculation is based on default motor calculation in accordance with ANS/AMCA Standard 208.

PRU 165-80 BELT DRIVE

RPM	Tip Speed	Max Sones	0.00"SP		0.25"SP		0.38"SP		0.62"SP		0.75"SP		1.00"SP		1.12"SP		1.38"SP		1.50"SP		1.75"SP		1.88"SP	
			CFM		CFM		CFM		CFM		CFM		CFM		CFM		CFM		CFM		CFM		CFM	
			BHP	FEI	BHP	FEI	BHP	FEI	BHP	FEI	BHP	FEI	BHP	FEI	BHP	FEI	BHP	FEI	BHP	FEI	BHP	FEI	BHP	FEI
427	1845	1.9	998																					
			0.02	2.4																				
590	2549	5.6	1397		786																			
			0.05	2.23	0.05	2.32																		
753	3254	8.1	1799		1409		1148																	
			0.11	1.69	0.13	1.85	0.13	1.84																
916	3959	11.5	2201		1878		1702		1130															
			0.19	1.28	0.22	1.49	0.24	1.5	0.21	1.58														
1080	4663	16.2	2601		2344		2204		1925		1734													
			0.32	0.95	0.37	1.14	0.4	1.22	0.43	1.3	0.43	1.33												
1243	5368	19.8	2998		2793		2673		2453		2332		2009		1787									
			0.51	0.71	0.6	0.86	0.61	0.97	0.63	1.12	0.64	1.17	0.64	1.26	0.62	1.27								
1406	6073	24	3395		3217		3128		2925		2834		2606		2491		2171		1942					
			0.77	0.55	0.93	0.66	0.91	0.76	0.92	0.94	0.92	1	0.93	1.11	0.93	1.15	0.91	1.21	0.89	1.2				
1569	6777	28	3792		3614		3538		3360		3284		3081		3004		2776		2649		2319		2065	
			1.09	0.44	1.14	0.61	1.16	0.67	1.19	0.82	1.21	0.87	1.23	0.99	1.24	1.03	1.25	1.11	1.25	1.14	1.22	1.16	1.18	1.15
1732	7482	33	4186		4018		3962		3794		3709		3569		3485		3289		3205		3008		2868	
			1.46	0.36	1.52	0.51	1.54	0.56	1.59	0.69	1.61	0.76	1.63	0.85	1.65	0.9	1.67	0.99	1.67	1.02	1.68	1.08	1.67	1.1
1895	8187	39	4580		4427		4366		4212		4151		3997		3936		3783		3691		3537		3445	
			1.92	0.3	1.98	0.43	2.01	0.48	2.06	0.6	2.08	0.65	2.12	0.75	2.13	0.79	2.16	0.87	2.18	0.91	2.19	0.97	2.2	1
Maximum RPM 1895.25					Max HP: 3.00				Outlet Area (Sq.Ft.): 2.94				Wheel Diameter (in): 16.5				Tip Speed: 4.32 x RPM				Max Motor Frame Size: 145T			

Performance certified is for installation type A: Free inlet, Free outlet. Power rating (Bhp) does not include transmission losses. Performance ratings do not include the effects of appurtenances. The sound ratings shown are loudness values in fan sones at 5 ft. (1.5 m) in a hemispherical free field calculated per AMCA Standard 301. Values shown are for installation type A: Free inlet hemispherical sone levels. FEI calculation is based on default motor calculation in accordance with ANS/AMCA Standard 208.

PRU 165-050 BELT DRIVE

RPM	Tip Speed	Max Sones	0.00"SP		0.25"SP		0.62"SP		0.88"SP		1.12"SP		1.50"SP		1.75"SP		2.00"SP		2.25"SP		2.62"SP		2.88"SP	
			CFM		CFM		CFM		CFM		CFM		CFM		CFM		CFM		CFM		CFM		CFM	
			BHP	FEI	BHP	FEI	BHP	FEI	BHP	FEI	BHP	FEI	BHP	FEI	BHP	FEI	BHP	FEI	BHP	FEI	BHP	FEI	BHP	FEI
427	1845	2.2	670																					
			0.06	1.39																				
610	2636	5.3	977		554																			
			0.10	1.21	0.10	1.24																		
793	3427	8.0	1302		983																			
			0.13	1.20	0.13	1.45																		
977	4219	11.7	1628		1351		889																	
			0.17	1.11	0.17	1.42	0.18	1.52																
1160	5010	16.3	1958		1735		1384		1089															
			0.23	1.01	0.24	1.32	0.25	1.58	0.26	1.59														
1343	5802	20	2290		2097		1798		1570		1307													
			0.30	0.91	0.30	1.25	0.34	1.51	0.35	1.60	0.35	1.62												
1526	6593	25	2622		2460		2194		2011		1786		1398		989									
			0.40	0.79	0.38	1.14	0.43	1.41	0.46	1.52	0.47	1.60	0.47	1.62	0.44	1.50								
1710	7385	30	2937		2798		2591		2429		2268		1991		1784		1530		1207					
			0.55	0.65	0.58	0.91	0.62	1.18	0.64	1.33	0.67	1.42	0.69	1.52	0.70	1.55	0.68	1.55	0.65	1.47				
1893	8176	35	3251		3149		2945		2792		2664		2434		2256		2077		1873		1490		1133	
			0.75	0.54	0.77	0.73	0.82	1.02	0.85	1.17	0.88	1.27	0.92	1.39	0.93	1.45	0.94	1.48	0.94	1.50	0.91	1.46	0.85	1.35
2076	8968	39	3566		3454		3286		3174		3034		2838		2698		2558		2390		2110		1914	
			0.99	0.45	1.02	0.65	1.06	0.88	1.09	1.01	1.13	1.13	1.18	1.26	1.20	1.33	1.22	1.38	1.24	1.42	1.24	1.46	1.23	1.46
Maximum RPM 2076					Max HP: 3.00				Outlet Area (Sq.Ft.): 2.94				Wheel Diameter (in): 16.5				Tip Speed: 4.32 x RPM				Max Motor Frame Size: 145T			

Performance certified is for installation type A: Free inlet, Free outlet. Power rating (Bhp) does not include transmission losses. Performance ratings do not include the effects of appurtenances. The sound ratings shown are loudness values in fan sones at 5 ft. (1.5 m) in a hemispherical free field calculated per AMCA Standard 301. Values shown are for installation type A: Free inlet hemispherical sone levels. FEI calculation is based on default motor calculation in accordance with ANS/AMCA Standard 208.

PRU 182-100 BELT DRIVE

RPM	Tip Speed	Max Sones	0.00"SP		0.25"SP		0.50"SP		0.62"SP		0.88"SP		1.12"SP		1.38"SP		1.62"SP		1.75"SP		2.00"SP		2.25"SP	
			CFM		CFM		CFM		CFM		CFM		CFM		CFM		CFM		CFM		CFM		CFM	
			BHP	FEI	BHP	FEI	BHP	FEI	BHP	FEI	BHP	FEI	BHP	FEI	BHP	FEI	BHP	FEI	BHP	FEI	BHP	FEI	BHP	FEI
427	2040	3.3	1441																					
			0.05	2.28																				
553	2644	6.1	1889		1160																			
			0.09	2.02	0.10	2.01																		
680	3248	8.0	2337		1856																			
			0.14	1.66	0.15	1.99																		
806	3853	10.9	2844		2448		1916																	
			0.26	1.20	0.25	1.62	0.28	1.64																
933	4457	14.4	3351		2986		2598		2356															
			0.43	0.90	0.39	1.33	0.43	1.46	0.44	1.47														
1059	5061	18.7	3845		3511		3210		3038		2566													
			0.62	0.73	0.61	1.05	0.64	1.23	0.65	1.29	0.67	1.35												
1186	5665	22	4323		3997		3733		3588		3251		2794											
			0.82	0.63	0.82	0.90	0.87	1.05	0.89	1.12	0.92	1.23	0.92	1.28										
1312	6269	26	4817		4535		4273		4169		3883		3571		3152									
			1.12	0.52	1.16	0.72	1.22	0.89	1.24	0.94	1.28	1.07	1.30	1.16	1.28	1.21								
1439	6873	30	5327		5063		4828		4711		4478		4215		3923		3513		3249					
			1.54	0.42	1.47	0.63	1.57	0.77	1.60	0.83	1.66	0.94	1.70	1.04	1.72	1.11	1.71	1.15	1.68	1.16				
1565	7477	34	5837		5570		5343		5246		5019		4793		4566		4275		4113		3660		2656	
			2.04	0.35	1.83	0.57	1.98	0.69	2.02	0.74	2.10	0.85	2.16	0.94	2.20	1.00	2.23	1.07	2.23	1.09	2.19	1.12	1.88	1.07
Maximum RPM 1565					Max HP: 3.00				Outlet Area (Sq.Ft.): 2.46				Wheel Diameter (in): 18.25				Tip Speed: 4.78 x RPM				Max Motor Frame Size: 184T			

Performance certified is for installation type A: Free inlet, Free outlet. Power rating (Bhp) does not include transmission losses. Performance ratings do not include the effects of appurtenances. The sound ratings shown are loudness values in fan sones at 5 ft. (1.5 m) in a hemispherical free field calculated per AMCA Standard 301. Values shown are for installation type A: Free inlet hemispherical sone levels. FEI calculation is based on default motor calculation in accordance with ANS/AMCA Standard 208.

PRU 182-080 BELT DRIVE

RPM	Tip Speed	Max Sones	0.00"SP		0.25"SP		0.50"SP		0.75"SP		1.00"SP		1.38"SP		1.62"SP		1.88"SP		2.12"SP		2.38"SP		2.62"SP	
			CFM		CFM		CFM		CFM		CFM		CFM		CFM		CFM		CFM		CFM		CFM	
			BHP	FEI	BHP	FEI	BHP	FEI	BHP	FEI	BHP	FEI	BHP	FEI	BHP	FEI	BHP	FEI	BHP	FEI	BHP	FEI	BHP	FEI
427	2040	3.2	1386																					
			0.05	2.36																				
562	2686	6.1	1835		1192																			
			0.08	2.12	0.08	2.27																		
697	3331	8.1	2288		1860																			
			0.13	1.75	0.14	2.1																		
832	3977	11.4	2772		2423		1980																	
			0.22	1.35	0.23	1.71	0.25	1.83																
967	4622	15.2	3255		2945		2620		2150															
			0.34	1.06	0.35	1.43	0.39	1.58	0.41	1.64														
1103	5268	19.5	3728		3456		3186		2873		2457													
			0.54	0.8	0.55	1.12	0.59	1.31	0.62	1.44	0.63	1.49												
1238	5913	23	4198		3943		3686		3429		3149		2448											
			0.81	0.62	0.76	0.93	0.83	1.11	0.87	1.25	0.89	1.34	0.87	1.38										
1373	6559	27	4655		4464		4262		4033		3828		3415		3050		2235							
			1.12	0.51	1.25	0.65	1.24	0.85	1.27	1.01	1.29	1.12	1.32	1.26	1.31	1.3	1.16	1.25						
1508	7204	32	5110		4943		4754		4590		4397		4090		3835		3549		3083					
			1.49	0.42	1.8	0.52	1.72	0.71	1.73	0.84	1.76	0.96	1.79	1.11	1.81	1.18	1.8	1.23	1.74	1.25				
1643	7850	37	5566		5411		5225		5070		4915		4636		4451		4234		3955		3614		2964	
			1.94	0.35	2	0.5	2.07	0.65	2.13	0.76	2.18	0.86	2.26	1	2.3	1.07	2.32	1.13	2.33	1.18	2.29	1.21	2.12	1.19

Maximum RPM 1643	Max HP: 3.00	Outlet Area (Sq.Ft.): 3.59	Wheel Diameter (in): 18.25	Tip Speed: 4.78 x RPM	Max Motor Frame Size: 184T

Performance certified is for installation type A: Free inlet, Free outlet. Power rating (Bhp) does not include transmission losses. Performance ratings do not include the effects of appurtenances. The sound ratings shown are loudness values in fan sones at 5 ft. (1.5 m) in a hemispherical free field calculated per AMCA Standard 301. Values shown are for installation type A: Free inlet hemispherical sone levels. FEI calculation is based on default motor calculation in accordance with ANS/AMCA Standard 208.

PRU 182-050 BELT DRIVE

RPM	Tip Speed	Max Sones	0.00"SP		0.38"SP		0.62"SP		1.00"SP		1.25"SP		1.62"SP		2.00"SP		2.25"SP		2.62"SP		2.88"SP		3.25"SP	
			CFM		CFM		CFM		CFM		CFM		CFM		CFM		CFM		CFM		CFM		CFM	
			BHP	FEI	BHP	FEI	BHP	FEI	BHP	FEI	BHP	FEI	BHP	FEI	BHP	FEI	BHP	FEI	BHP	FEI	BHP	FEI	BHP	FEI
427	2040	2.8	1384																					
			0.04	2.51																				
580	2769	5.7	1894																					
			0.07	2.35																				
732	3498	8.1	2416		1658																			
			0.11	2.01	0.13	2.36																		
885	4227	11.6	2963		2319		1822																	
			0.17	1.71	0.2	2.21	0.2	2.28																
1037	4956	16.3	3507		2955		2604		1785															
			0.27	1.38	0.31	1.87	0.32	2.08	0.32	2.09														
1190	5685	20	4043		3523		3226		2713		2200													
			0.41	1.08	0.44	1.61	0.48	1.79	0.51	1.94	0.5	1.92												
1342	6413	24	4475		4057		3795		3387		3095		2505											
			0.61	0.83	0.7	1.18	0.73	1.4	0.77	1.63	0.79	1.72	0.78	1.75										
1495	7142	29	4840		4469		4227		3895		3682		3284		2783		2232							
			0.86	0.66	1.04	0.91	1.05	1.12	1.09	1.36	1.11	1.46	1.13	1.59	1.12	1.63	1.06	1.56						
1647	7871	33	5205		4856		4666		4384		4196		3880		3559		3296		2752		2030			
			1.15	0.54	1.43	0.74	1.43	0.91	1.46	1.13	1.48	1.25	1.51	1.4	1.53	1.5	1.53	1.54	1.5	1.53	1.37	1.39		
1800	8600	39	5571		5235		5048		4786		4600		4338		4077		3890		3517		3256		2546	
			1.47	0.46	1.62	0.69	1.69	0.83	1.77	1.02	1.82	1.14	1.87	1.28	1.91	1.38	1.93	1.43	1.95	1.49	1.94	1.5	1.84	1.42

Maximum RPM 1800	Max HP: 3.00	Outlet Area (Sq.Ft.): 3.59	Wheel Diameter (in): 18.25	Tip Speed: 4.78 x RPM	Max Motor Frame Size: 184T

Performance certified is for installation type A: Free inlet, Free outlet. Power rating (Bhp) does not include transmission losses. Performance ratings do not include the effects of appurtenances. The sound ratings shown are loudness values in fan sones at 5 ft. (1.5 m) in a hemispherical free field calculated per AMCA Standard 301. Values shown are for installation type A: Free inlet hemispherical sone levels. FEI calculation is based on default motor calculation in accordance with ANS/AMCA Standard 208.

PRU 200-100 BELT DRIVE

RPM	Tip Speed	Max Sones	0.00"SP		0.12"SP		0.38"SP		0.50"SP		0.75"SP		0.88"SP		1.00"SP		1.25"SP		1.38"SP		1.62"SP		1.75"SP	
			CFM		CFM		CFM		CFM		CFM		CFM		CFM		CFM		CFM		CFM		CFM	
			BHP	FEI	BHP	FEI	BHP	FEI	BHP	FEI	BHP	FEI	BHP	FEI	BHP	FEI	BHP	FEI	BHP	FEI	BHP	FEI	BHP	FEI
427	2236	4.1	1904		1492																			
			0.07	2.25	0.08	2.29																		
527	2758	6.6	2370		2058																			
			0.11	1.96	0.12	2.19																		
627	3281	8.7	2839		2592		1868																	
			0.18	1.63	0.18	1.89	0.2	1.85																
726	3803	10.7	3366		3132		2606		2214															
			0.3	1.22	0.28	1.52	0.31	1.68	0.32	1.64														
826	4326	13.6	3892		3663		3217		2960		1832													
			0.46	0.95	0.41	1.25	0.45	1.46	0.48	1.49	0.42	1.42												
926	4848	16.8	4415		4210		3819		3621		3101		2710											
			0.67	0.76	0.64	0.96	0.66	1.22	0.68	1.29	0.71	1.36	0.7	1.36										
1026	5370	21	4912		4714		4362		4170		3786		3539		3212									
			0.86	0.67	0.81	0.84	0.88	1.04	0.9	1.13	0.94	1.25	0.95	1.28	0.95	1.3								
1125	5893	24	5409		5202		4872		4691		4360		4180		3969		3368		2737					
			1.09	0.58	1	0.76	1.13	0.92	1.17	1	1.22	1.12	1.24	1.17	1.25	1.21	1.23	1.25	1.14	1.2				
1225	6415	28	5933		5747		5453		5292		5002		4842		4681		4295		4036		3219			
			1.46	0.49	1.41	0.62	1.52	0.77	1.56	0.85	1.62	0.97	1.64	1.03	1.65	1.08	1.67	1.15	1.67	1.18	1.56	1.17		
1325	6938	31	6463		6285		5998		5856		5572		5430		5289		4970		4792		4330		4009	
			1.91	0.41	1.68	0.56	1.88	0.69	1.93	0.76	2.01	0.88	2.05	0.93	2.07	0.98	2.11	1.06	2.13	1.09	2.12	1.13	2.08	1.14
Maximum RPM 1325					Max HP: 5.00				Outlet Area (Sq.Ft.): 4.31				Wheel Diameter (in): 20				Tip Speed: 5.24 x RPM				Max Motor Frame Size: 184T			

Performance certified is for installation type A: Free inlet, Free outlet. Power rating (Bhp) does not include transmission losses. Performance ratings do not include the effects of appurtenances. The sound ratings shown are loudness values in fan sones at 5 ft. (1.5 m) in a hemispherical free field calculated per AMCA Standard 301. Values shown are for installation type A: Free inlet hemispherical sone levels. FEI calculation is based on default motor calculation in accordance with ANS/AMCA Standard 208.

PRU 200-080 BELT DRIVE

RPM	Tip Speed	Max Sones	0.00"SP		0.25"SP		0.38"SP		0.62"SP		0.88"SP		1.00"SP		1.25"SP		1.50"SP		1.75"SP		1.88"SP		2.12"SP	
			CFM		CFM		CFM		CFM		CFM		CFM		CFM		CFM		CFM		CFM		CFM	
			BHP	FEI	BHP	FEI	BHP	FEI	BHP	FEI	BHP	FEI	BHP	FEI	BHP	FEI	BHP	FEI	BHP	FEI	BHP	FEI	BHP	FEI
427	2236	4.0	1828																					
			0.07	2.36																				
534	2797	6.7	2297		1594																			
			0.1	2.07	0.11	2.29																		
641	3357	8.7	2772		2267		1918																	
			0.16	1.73	0.17	2.07	0.18	2.11																
748	3918	11.1	3276		2847		2594		1740															
			0.25	1.38	0.27	1.74	0.28	1.82	0.27	1.75														
855	4479	14.2	3781		3401		3191		2709															
			0.38	1.11	0.39	1.47	0.42	1.57	0.44	1.66														
963	5040	17.8	4278		3951		3784		3400		2921		2542											
			0.56	0.87	0.58	1.18	0.61	1.29	0.65	1.45	0.66	1.52	0.65	1.5										
1070	5601	22	4769		4462		4303		3984		3611		3399		2736									
			0.81	0.69	0.78	1	0.82	1.1	0.87	1.26	0.91	1.37	0.92	1.41	0.89	1.4								
1177	6162	26	5254		4998		4853		4591		4300		4125		3745		3188							
			1.11	0.56	1.18	0.76	1.19	0.87	1.22	1.04	1.25	1.18	1.27	1.24	1.28	1.32	1.25	1.34						
1284	6722	29	5729		5498		5375		5158		4908		4751		4467		4148		3665		3308			
			1.45	0.47	1.65	0.62	1.62	0.72	1.64	0.87	1.67	1.01	1.69	1.08	1.71	1.18	1.72	1.24	1.69	1.28	1.64	1.27		
1391	7283	33	6204		6003		5905		5708		5475		5375		5139		4867		4556		4382		3889	
			1.85	0.4	2.25	0.5	2.17	0.59	2.14	0.74	2.17	0.88	2.18	0.93	2.22	1.03	2.24	1.12	2.25	1.18	2.25	1.21	2.19	1.23
Maximum RPM 1391					Max HP: 5.00				Outlet Area (Sq.Ft.): 4.31				Wheel Diameter (in): 20				Tip Speed: 5.24 x RPM				Max Motor Frame Size: 184T			

Performance certified is for installation type A: Free inlet, Free outlet. Power rating (Bhp) does not include transmission losses. Performance ratings do not include the effects of appurtenances. The sound ratings shown are loudness values in fan sones at 5 ft. (1.5 m) in a hemispherical free field calculated per AMCA Standard 301. Values shown are for installation type A: Free inlet hemispherical sone levels. FEI calculation is based on default motor calculation in accordance with ANS/AMCA Standard 208.

PRU 200-050 BELT DRIVE

RPM	Tip Speed	Max Sones	0.00"SP		0.25"SP		0.50"SP		0.75"SP		1.00"SP		1.25"SP		1.38"SP		1.62"SP		1.88"SP		2.12"SP		2.38"SP	
			CFM		CFM		CFM		CFM		CFM		CFM		CFM		CFM		CFM		CFM		CFM	
			BHP	FEI	BHP	FEI	BHP	FEI	BHP	FEI	BHP	FEI	BHP	FEI	BHP	FEI	BHP	FEI	BHP	FEI	BHP	FEI	BHP	FEI
427	2236	3.5	1827																					
			0.06	2.57																				
550	2879	6.5	2367		1631																			
			0.09	2.33	0.1	2.44																		
673	3523	8.4	2924		2346		1490																	
			0.14	2.01	0.16	2.33	0.15	2.2																
796	4166	11.3	3503		2971		2447																	
			0.2	1.73	0.22	2.11	0.24	2.29																
919	4810	14.9	4083		3619		3190		2693															
			0.29	1.45	0.33	1.78	0.35	2.06	0.36	2.2														
1041	5453	19.4	4651		4209		3848		3436		2972		2120											
			0.44	1.15	0.46	1.54	0.5	1.77	0.53	1.93	0.54	1.99	0.5	1.87										
1164	6096	23	5184		4798		4484		4142		3799		3370		3113									
			0.62	0.93	0.68	1.23	0.72	1.46	0.76	1.64	0.79	1.76	0.8	1.82	0.8	1.82								
1287	6740	27	5571		5233		4937		4642		4346		4050		3871		3481		2932					
			0.86	0.74	1	0.93	1.02	1.16	1.05	1.35	1.09	1.49	1.11	1.59	1.12	1.64	1.12	1.68	1.09	1.66				
1410	7383	31	5958		5642		5396		5121		4877		4633		4479		4201		3856		3472			
			1.14	0.61	1.38	0.75	1.37	0.95	1.41	1.13	1.44	1.27	1.46	1.38	1.48	1.44	1.49	1.52	1.5	1.58	1.49	1.59		
1533	8027	35	6345		6086		5830		5577		5357		5136		5042		4787		4530		4270		3937	
			1.46	0.51	1.85	0.59	1.79	0.79	1.81	0.97	1.85	1.1	1.88	1.22	1.89	1.26	1.91	1.36	1.93	1.44	1.94	1.49	1.94	1.52
Maximum RPM 1533					Max HP: 5.00				Outlet Area (Sq.Ft.): 4.31				Wheel Diameter (in): 20				Tip Speed: 5.24 x RPM				Max Motor Frame Size: 184T			

Performance certified is for installation type A: Free inlet, Free outlet. Power rating (Bhp) does not include transmission losses. Performance ratings do not include the effects of appurtenances. The sound ratings shown are loudness values in fan sones at 5 ft. (1.5 m) in a hemispherical free field calculated per AMCA Standard 301. Values shown are for installation type A: Free inlet hemispherical sone levels. FEI calculation is based on default motor calculation in accordance with ANS/AMCA Standard 208.

PRU 222-100 BELT DRIVE

RPM	Tip Speed	Max Sones	0.00"SP		0.25"SP		0.38"SP		0.62"SP		0.75"SP		1.00"SP		1.25"SP		1.38"SP		1.62"SP		1.75"SP		2.00"SP	
			CFM		CFM		CFM		CFM		CFM		CFM		CFM		CFM		CFM		CFM		CFM	
			BHP	FEI	BHP	FEI	BHP	FEI	BHP	FEI	BHP	FEI	BHP	FEI	BHP	FEI	BHP	FEI	BHP	FEI	BHP	FEI	BHP	FEI
427	2487	5.2	2634																					
			0.11	2.14																				
518	3020	8.0	3222		2436																			
			0.18	1.8	0.19	2.03																		
610	3553	7.7	3853		3233		2833																	
			0.29	1.39	0.3	1.78	0.32	1.76																
701	4085	12.5	4518		3946		3650		2672															
			0.47	1.05	0.45	1.48	0.48	1.55	0.49	1.51														
793	4618	15.4	5182		4638		4380		3777		3317													
			0.72	0.82	0.65	1.25	0.68	1.33	0.73	1.41	0.74	1.4												
884	5151	18.8	5821		5342		5116		4627		4334		3461											
			0.96	0.7	0.94	1	0.97	1.1	1.02	1.25	1.04	1.29	1.02	1.3										
976	5683	23	6448		5960		5781		5351		5135		4561		3594									
			1.23	0.61	1.22	0.88	1.27	0.95	1.34	1.1	1.36	1.16	1.39	1.24	1.32	1.23								
1067	6216	27	7093		6680		6487		6103		5912		5492		4955		4569							
			1.61	0.51	1.68	0.71	1.73	0.8	1.8	0.94	1.83	1.01	1.87	1.11	1.87	1.18	1.85	1.2						
1159	6749	31	7762		7380		7166		6826		6656		6275		5851		5596		4957		4442			
			2.15	0.43	2.07	0.63	2.16	0.71	2.26	0.84	2.3	0.9	2.37	1	2.41	1.08	2.42	1.11	2.39	1.15	2.3	1.14		
1250	7281	35	8430		8049		7862		7535		7396		7023		6650		6464		5998		5718		4925	
			2.78	0.36	2.53	0.57	2.65	0.64	2.8	0.76	2.84	0.8	2.94	0.91	3.01	0.99	3.03	1.02	3.06	1.08	3.05	1.1	2.93	1.1
Maximum RPM 1250					Max HP: 5.00				Outlet Area (Sq.Ft.): 5.36				Wheel Diameter (in): 22.25				Tip Speed: 5.83 x RPM				Max Motor Frame Size: 184T			

Performance certified is for installation type A: Free inlet, Free outlet. Power rating (Bhp) does not include transmission losses. Performance ratings do not include the effects of appurtenances. The sound ratings shown are loudness values in fan sones at 5 ft. (1.5 m) in a hemispherical free field calculated per AMCA Standard 301. Values shown are for installation type A: Free inlet hemispherical sone levels. FEI calculation is based on default motor calculation in accordance with ANS/AMCA Standard 208.

PRU 222-080 BELT DRIVE

RPM	Tip Speed	Max Sones	0.00"SP		0.25"SP		0.50"SP		0.75"SP		1.00"SP		1.25"SP		1.38"SP		1.62"SP		1.88"SP		2.12"SP		2.38"SP	
			CFM		CFM		CFM		CFM		CFM		CFM		CFM		CFM		CFM		CFM		CFM	
			BHP	FEI	BHP	FEI	BHP	FEI	BHP	FEI	BHP	FEI	BHP	FEI	BHP	FEI	BHP	FEI	BHP	FEI	BHP	FEI	BHP	FEI
427	2487	5.1	2523		1252																			
			0.1	2.27	0.1	2.06																		
525	3061	8.1	3115		2369																			
			0.16	1.92	0.16	2.25																		
624	3634	10.5	3739		3152		2286																	
			0.25	1.54	0.27	1.89	0.28	1.91																
722	4208	12.7	4377		3869		3289																	
			0.39	1.22	0.41	1.59	0.45	1.72																
821	4781	16.1	5015		4588		4137		3546															
			0.57	0.98	0.62	1.29	0.67	1.47	0.7	1.56														
919	5355	19.8	5635		5221		4844		4402		3805													
			0.85	0.75	0.86	1.08	0.92	1.25	0.97	1.38	0.99	1.45												
1018	5928	25	6256		5875		5492		5144		4691		4099		3682									
			1.21	0.6	1.13	0.91	1.24	1.09	1.29	1.22	1.34	1.32	1.34	1.37	1.31	1.35								
1116	6501	29	6859		6575		6239		5939		5599		5219		4990		4375							
			1.62	0.5	1.8	0.65	1.8	0.86	1.83	1	1.87	1.13	1.9	1.22	1.9	1.25	1.87	1.29						
1215	7075	33	7460		7212		6934		6654		6371		6045		5881		5508		5004		4153			
			2.1	0.42	2.51	0.52	2.4	0.71	2.42	0.86	2.46	0.98	2.5	1.08	2.52	1.12	2.53	1.19	2.51	1.23	2.36	1.22		
1313	7648	37	8061		7853		7601		7347		7090		6829		6698		6390		6033		5624		5025	
			2.66	0.36	3.43	0.42	3.15	0.6	3.13	0.74	3.17	0.85	3.21	0.95	3.23	0.99	3.26	1.07	3.28	1.13	3.27	1.18	3.18	1.19
Maximum RPM 1313					Max HP: 5.00				Outlet Area (Sq.Ft.): 5.36				Wheel Diameter (in): 22.25				Tip Speed: 5.83 x RPM				Max Motor Frame Size: 184T			

Performance certified is for installation type A: Free inlet, Free outlet. Power rating (Bhp) does not include transmission losses. Performance ratings do not include the effects of appurtenances. The sound ratings shown are loudness values in fan sones at 5 ft. (1.5 m) in a hemispherical free field calculated per AMCA Standard 301. Values shown are for installation type A: Free inlet hemispherical sone levels. FEI calculation is based on default motor calculation in accordance with ANS/AMCA Standard 208.

PRU 222-050 BELT DRIVE

RPM	Tip Speed	Max Sones	0.00"SP		0.38"SP		0.62"SP		1.00"SP		1.25"SP		1.62"SP		2.00"SP		2.25"SP		2.62"SP		2.88"SP		3.25"SP	
			CFM		CFM		CFM		CFM		CFM		CFM		CFM		CFM		CFM		CFM		CFM	
			BHP	FEI	BHP	FEI	BHP	FEI	BHP	FEI	BHP	FEI	BHP	FEI	BHP	FEI	BHP	FEI	BHP	FEI	BHP	FEI	BHP	FEI
427	2487	4.5	2522																					
			0.08	2.55																				
539	3142	7.7	3202		1741																			
			0.13	2.2	0.15	2.26																		
652	3796	10.0	3923		2885																			
			0.2	1.9	0.23	2.33																		
764	4450	12.8	4653		3723		3069																	
			0.29	1.61	0.34	2.13	0.35	2.26																
876	5105	16.6	5375		4560		4058		3018															
			0.44	1.3	0.5	1.8	0.53	2	0.53	2.06														
989	5759	22	6090		5346		4899		4166		3434													
			0.64	1.03	0.68	1.56	0.73	1.75	0.79	1.9	0.79	1.89												
1101	6413	26	6652		6030		5640		5034		4600		3723											
			0.91	0.82	1.05	1.17	1.09	1.38	1.15	1.61	1.18	1.7	1.16	1.72										
1213	7068	30	7139		6589		6230		5738		5379		4789		4001		2988							
			1.24	0.66	1.48	0.91	1.51	1.12	1.56	1.35	1.6	1.47	1.62	1.59	1.6	1.61	1.47	1.49						
1326	7722	34	7626		7109		6784		6368		6090		5623		5053		4664		3702					
			1.61	0.55	2	0.75	2.01	0.95	2.05	1.16	2.08	1.27	2.12	1.41	2.15	1.51	2.14	1.54	2.05	1.48				
1438	8376	39	8114		7632		7343		6961		6722		6339		5901		5605		5046		4572		3397	
			2.03	0.47	2.61	0.63	2.58	0.8	2.62	1	2.65	1.11	2.7	1.25	2.74	1.37	2.76	1.43	2.76	1.48	2.74	1.48	2.54	1.35
Maximum RPM 1438					Max HP: 5.00				Outlet Area (Sq.Ft.): 5.36				Wheel Diameter (in): 22.25				Tip Speed: 5.83 x RPM				Max Motor Frame Size: 184T			

Performance certified is for installation type A: Free inlet, Free outlet. Power rating (Bhp) does not include transmission losses. Performance ratings do not include the effects of appurtenances. The sound ratings shown are loudness values in fan sones at 5 ft. (1.5 m) in a hemispherical free field calculated per AMCA Standard 301. Values shown are for installation type A: Free inlet hemispherical sone levels. FEI calculation is based on default motor calculation in accordance with ANS/AMCA Standard 208.

PRU 245-100 BELT DRIVE

RPM	Tip Speed	Max Sones	0.00"SP		0.12"SP		0.25"SP		0.50"SP		0.62"SP		0.75"SP		0.88"SP		1.00"SP		1.25"SP		1.38"SP		1.50"SP	
			CFM		CFM		CFM		CFM		CFM		CFM		CFM		CFM		CFM		CFM		CFM	
			BHP	FEI	BHP	FEI	BHP	FEI	BHP	FEI	BHP	FEI	BHP	FEI	BHP	FEI	BHP	FEI	BHP	FEI	BHP	FEI	BHP	FEI
350	2245	4.5	3005		2402																			
			0.11	2.43	0.11	2.56																		
442	2833	6.9	3781		3352		2796																	
			0.21	1.77	0.23	1.91	0.22	2.02																
533	3421	9.6	4556		4222		3830																	
			0.36	1.32	0.4	1.43	0.4	1.61																
625	4009	12.6	5332		5063		4749		4006		3361													
			0.58	1.02	0.66	1.08	0.64	1.27	0.65	1.47	0.63	1.47												
717	4597	15.8	6108		5870		5609		5058		4699		4269		3449									
			0.86	0.8	1.02	0.84	0.97	1.01	0.98	1.23	0.99	1.31	0.98	1.35	0.91	1.31								
808	5185	19.3	6945		6696		6472		5955		5660		5363		4989		4455							
			1.23	0.65	1.2	0.81	1.25	0.9	1.32	1.09	1.35	1.17	1.36	1.22	1.37	1.25	1.34	1.26						
900	5773	23	7816		7559		7343		6915		6658		6401		6102		5801		4850					
			1.7	0.53	1.54	0.72	1.65	0.8	1.76	0.95	1.8	1.02	1.83	1.08	1.86	1.13	1.88	1.16	1.83	1.18				
992	6361	26	8663		8470		8277		7891		7650		7457		7216		6974		6395		6009		5527	
			2.29	0.44	2.32	0.54	2.36	0.63	2.43	0.78	2.47	0.86	2.5	0.92	2.53	0.98	2.55	1.03	2.58	1.1	2.57	1.12	2.53	1.13
1083	6949	30	9464		9306		9095		8726		8568		8357		8146		7935		7514		7250		6934	
			2.98	0.37	3.02	0.45	3.06	0.54	3.14	0.69	3.17	0.74	3.22	0.81	3.25	0.87	3.29	0.92	3.33	0.99	3.35	1.03	3.36	1.06
1175	7537	34	10265		10093		9922		9579		9407		9236		9064		8893		8492		8321		8092	
			3.81	0.32	3.85	0.4	3.89	0.47	3.98	0.6	4.02	0.66	4.06	0.72	4.1	0.77	4.14	0.81	4.21	0.9	4.23	0.93	4.26	0.97
Maximum RPM 1175					Max HP: 7.50				Outlet Area (Sq.Ft.): 5.36				Wheel Diameter (in): 24.5				Tip Speed: 6.41 x RPM				Max Motor Frame Size: 215T			

Performance certified is for installation type A: Free inlet, Free outlet. Power rating (Bhp) does not include transmission losses. Performance ratings do not include the effects of appurtenances. The sound ratings shown are loudness values in fan sones at 5 ft. (1.5 m) in a hemispherical free field calculated per AMCA Standard 301. Values shown are for installation type A: Free inlet hemispherical sone levels. FEI calculation is based on default motor calculation in accordance with ANS/AMCA Standard 208.

PRD 245-080 BELT DRIVE

RPM	Tip Speed	Max Sones	0.00"SP		0.25"SP		0.50"SP		0.75"SP		1.00"SP		1.25"SP		1.50"SP		1.75"SP		2.00"SP		2.25"SP		2.50"SP	
			CFM		CFM		CFM		CFM		CFM		CFM		CFM		CFM		CFM		CFM		CFM	
			BHP	FEI	BHP	FEI	BHP	FEI	BHP	FEI	BHP	FEI	BHP	FEI	BHP	FEI	BHP	FEI	BHP	FEI	BHP	FEI	BHP	FEI
350	2245	4.4	2833																					
			0.09	2.76																				
448	2875	7.0	3784		2627																			
			0.17	2.14	0.21	2																		
546	3505	9.9	4735		3684																			
			0.3	1.61	0.37	1.65																		
645	4135	13.2	5687		4608		3842																	
			0.49	1.22	0.59	1.34	0.62	1.48																
743	4765	16.7	6638		5476		4902		4125															
			0.77	0.95	0.87	1.1	0.93	1.26	0.94	1.36														
841	5395	20	7199		6421		5934		5390		4653													
			1.18	0.69	1.38	0.83	1.42	1.02	1.43	1.17	1.4	1.26												
939	6025	24	7728		7311		6921		6448		5961		5259											
			1.66	0.54	1.99	0.66	2	0.84	2.02	1	2.02	1.11	1.97	1.19										
1038	6655	28	8473		8128		7739		7350		6918		6400		5752		4715							
			2.24	0.44	2.39	0.61	2.51	0.76	2.59	0.89	2.63	0.99	2.63	1.09	2.58	1.15	2.4	1.15						
1136	7285	32	9275		8944		8613		8282		7904		7479		7006		6438		5634					
			2.94	0.37	3.12	0.52	3.25	0.65	3.35	0.76	3.42	0.87	3.45	0.97	3.45	1.04	3.4	1.1	3.27	1.13				
1234	7915	37	10078		9769		9461		9153		8845		8485		8074		7663		7149		6481		5505	
			3.77	0.32	3.97	0.45	4.12	0.57	4.24	0.67	4.33	0.77	4.4	0.86	4.43	0.94	4.43	1	4.39	1.06	4.27	1.09	4.01	1.09
Maximum RPM 1234					Max HP: 7.50				Outlet Area (Sq.Ft.): 5.36				Wheel Diameter (in): 24.5				Tip Speed: 6.41 x RPM				Max Motor Frame Size: 215T			

Performance certified is for installation type A: Free inlet, Free outlet. Power rating (Bhp) does not include transmission losses. Performance ratings do not include the effects of appurtenances. The sound ratings shown are loudness values in fan sones at 5 ft. (1.5 m) in a hemispherical free field calculated per AMCA Standard 301. Values shown are for installation type A: Free inlet hemispherical sone levels. FEI calculation is based on default motor calculation in accordance with ANS/AMCA Standard 208.

PRU 245-050 BELT DRIVE

RPM	Tip Speed	Max Sones	0.00"SP		0.25"SP		0.62"SP		0.88"SP		1.25"SP		1.50"SP		1.75"SP		2.12"SP		2.38"SP		2.75"SP		3.00"SP	
			CFM		CFM		CFM		CFM		CFM		CFM		CFM		CFM		CFM		CFM		CFM	
			BHP	FEI	BHP	FEI	BHP	FEI	BHP	FEI	BHP	FEI	BHP	FEI	BHP	FEI	BHP	FEI	BHP	FEI	BHP	FEI	BHP	FEI
350	2245	3.9	1978																					
			0.06	2.66																				
461	2958	6.6	2601		1832																			
			0.13	1.95	0.16	1.91																		
572	3672	9.6	3225		2658																			
			0.24	1.42	0.29	1.58																		
684	4386	13.0	3849		3390		2535																	
			0.4	1.06	0.48	1.25	0.51	1.4																
795	5099	16.8	4473		4108		3449		2867															
			0.63	0.82	0.74	0.98	0.78	1.22	0.79	1.28														
906	5813	21	5097		4778		4216		3808		2984													
			0.92	0.65	1.1	0.79	1.14	1.05	1.17	1.14	1.16	1.19												
1018	6526	25	5722		5401		4938		4581		3976		3441		2586									
			1.3	0.52	1.39	0.71	1.5	0.92	1.56	1.02	1.61	1.12	1.6	1.14	1.46	1.08								
1129	7240	29	6347		6071		5636		5320		4845		4450		4015		2988							
			1.78	0.43	1.87	0.59	2.01	0.79	2.08	0.9	2.17	1.01	2.2	1.06	2.19	1.09	2.03	1.05						
1240	7953	34	6973		6712		6321		6061		5627		5323		4975		4367		3846					
			2.36	0.36	2.47	0.51	2.62	0.69	2.7	0.78	2.82	0.9	2.87	0.96	2.91	1.01	2.91	1.05	2.83	1.05				
1351	8667	39	7598		7362		7031		6747		6368		6132		5848		5374		4996		4333		3718	
			3.05	0.3	3.17	0.43	3.33	0.59	3.44	0.7	3.58	0.81	3.64	0.87	3.71	0.92	3.77	0.98	3.77	1.01	3.7	1.02	3.53	1

Maximum RPM 1351.25	Max HP: 7.50	Outlet Area (Sq.Ft.): 5.36	Wheel Diameter (in): 24.5	Tip Speed: 6.41 x RPM	Max Motor Frame Size: 215T

Performance certified is for installation type A: Free inlet, Free outlet. Power rating (Bhp) does not include transmission losses. Performance ratings do not include the effects of appurtenances. The sound ratings shown are loudness values in fan sones at 5 ft. (1.5 m) in a hemispherical free field calculated per AMCA Standard 301. Values shown are for installation type A: Free inlet hemispherical sone levels. FEI calculation is based on default motor calculation in accordance with ANS/AMCA Standard 208.

PRU 245-030 BELT DRIVE

RPM	Tip Speed	Max Sones	0.00"SP		0.38"SP		0.88"SP		1.25"SP		1.75"SP		2.12"SP		2.50"SP		3.00"SP		3.38"SP		3.88"SP		4.25"SP	
			CFM		CFM		CFM		CFM		CFM		CFM		CFM		CFM		CFM		CFM		CFM	
			BHP	FEI	BHP	FEI	BHP	FEI	BHP	FEI	BHP	FEI	BHP	FEI	BHP	FEI	BHP	FEI	BHP	FEI	BHP	FEI	BHP	FEI
350	2245	3.5	1304																					
			0.04	2.52																				
509	3266	7.1	1942		1043																			
			0.1	1.91	0.13	1.69																		
668	4287	11.3	2580		1916																			
			0.21	1.31	0.28	1.46																		
828	5309	16.3	3151		2682		1962																	
			0.42	0.87	0.51	1.14	0.57	1.25																
987	6330	21	3688		3331		2761		2290															
			0.72	0.62	0.78	0.93	0.9	1.11	0.94	1.14														
1146	7351	27	4315		3957		3501		3164		2634		2081											
			1.08	0.49	1.21	0.72	1.32	0.95	1.4	1.05	1.48	1.09	1.49	1.03										
1305	8373	33	4898		4620		4246		3939		3545		3182		2795									
			1.65	0.37	1.88	0.55	1.95	0.78	2.03	0.9	2.12	1	2.18	1.04	2.22	1.04								
1465	9394	40	5482		5289		4952		4705		4353		4062		3774		3304		2903					
			2.36	0.29	2.83	0.41	2.8	0.64	2.86	0.76	2.95	0.88	3.02	0.94	3.08	0.98	3.14	1.01	3.14	0.99				
1624	10415	48	6072		5902		5598		5361		5057		4820		4550		4178		3873		3400		2994	
			3.24	0.24	3.36	0.37	3.55	0.56	3.68	0.68	3.81	0.79	3.9	0.85	3.99	0.91	4.09	0.96	4.14	0.98	4.18	0.98	4.14	0.96
1783	11436	56	6667		6518		6258		6036		5776		5553		5330		4996		4736		4402		4105	
			4.29	0.2	4.42	0.31	4.63	0.47	4.78	0.58	4.93	0.69	5.05	0.76	5.15	0.82	5.29	0.88	5.37	0.92	5.46	0.95	5.51	0.96

Maximum RPM 1783	Max HP: 7.50	Outlet Area (Sq.Ft.): 5.36	Wheel Diameter (in): 24.5	Tip Speed: 6.41 x RPM	Max Motor Frame Size: 215T

Performance certified is for installation type A: Free inlet, Free outlet. Power rating (Bhp) does not include transmission losses. Performance ratings do not include the effects of appurtenances. The sound ratings shown are loudness values in fan sones at 5 ft. (1.5 m) in a hemispherical free field calculated per AMCA Standard 301. Values shown are for installation type A: Free inlet hemispherical sone levels. FEI calculation is based on default motor calculation in accordance with ANS/AMCA Standard 208.

PRU 270-100 BELT DRIVE

RPM	Tip Speed	Max Sones	0.00"SP		0.12"SP		0.25"SP		0.50"SP		0.62"SP		0.75"SP		0.88"SP		1.00"SP		1.25"SP		1.38"SP		1.50"SP	
			CFM		CFM		CFM		CFM		CFM		CFM		CFM		CFM		CFM		CFM		CFM	
			BHP	FEI	BHP	FEI	BHP	FEI	BHP	FEI	BHP	FEI	BHP	FEI	BHP	FEI	BHP	FEI	BHP	FEI	BHP	FEI	BHP	FEI
318	2248	4.5	3654		2924																			
			0.13	2.44	0.13	2.58																		
413	2921	7.5	4733		4224		3606																	
			0.28	1.7	0.3	1.83	0.3	1.95																
508	3594	10.8	5811		5419		4982		3685															
			0.51	1.22	0.57	1.31	0.56	1.49	0.55	1.59														
604	4267	14.5	6890		6582		6213		5442		4921		3922											
			0.84	0.9	0.98	0.96	0.94	1.15	0.96	1.36	0.95	1.41	0.89	1.37										
699	4940	18.3	7994		7675		7378		6751		6375		5951		5388		4211							
			1.3	0.7	1.3	0.85	1.34	0.96	1.41	1.15	1.43	1.22	1.44	1.27	1.43	1.29	1.3	1.23						
794	5613	22	9206		8908		8656		8055		7755		7455		7053		6650		5115					
			1.9	0.55	1.74	0.73	1.85	0.81	1.98	0.99	2.03	1.05	2.06	1.11	2.09	1.16	2.1	1.19	1.97	1.17				
889	6286	27	10398		10167		9935		9414		9182		8893		8603		8313		7561		7097		6460	
			2.68	0.45	2.72	0.54	2.76	0.63	2.86	0.8	2.89	0.87	2.93	0.93	2.97	0.99	2.99	1.04	3.02	1.11	3.01	1.12	2.94	1.12
985	6959	31	11512		11319		11063		10614		10422		10165		9909		9652		9139		8819		8434	
			3.64	0.37	3.68	0.44	3.74	0.54	3.83	0.68	3.87	0.74	3.92	0.8	3.97	0.86	4.01	0.91	4.07	0.99	4.09	1.02	4.1	1.05
1080	7632	36	12625		12484		12274		11852		11641		11430		11219		11008		10516		10305		10023	
			4.8	0.31	4.84	0.36	4.89	0.43	5	0.57	5.06	0.63	5.11	0.69	5.16	0.74	5.21	0.79	5.3	0.88	5.33	0.91	5.37	0.95
1175	8306	42	13738		13585		13432		13050		12820		12667		12438		12285		11826		11672		11443	
			6.19	0.26	6.23	0.31	6.28	0.36	6.4	0.48	6.47	0.55	6.52	0.59	6.59	0.65	6.63	0.68	6.75	0.78	6.78	0.81	6.83	0.84
Maximum RPM 1175					Max HP: 10.00				Outlet Area (Sq.Ft.): 6.55				Wheel Diameter (in): 27				Tip Speed: 7.07 x RPM				Max Motor Frame Size: 215T			

Performance certified is for installation type A: Free inlet, Free outlet. Power rating (Bhp) does not include transmission losses. Performance ratings do not include the effects of appurtenances. The sound ratings shown are loudness values in fan sones at 5 ft. (1.5 m) in a hemispherical free field calculated per AMCA Standard 301. Values shown are for installation type A: Free inlet hemispherical sone levels. FEI calculation is based on default motor calculation in accordance with ANS/AMCA Standard 208.

PRU 270-080 BELT DRIVE

RPM	Tip Speed	Max Sones	0.00"SP		0.25"SP		0.38"SP		0.62"SP		0.88"SP		1.12"SP		1.25"SP		1.50"SP		1.75"SP		1.88"SP		2.12"SP	
			CFM		CFM		CFM		CFM		CFM		CFM		CFM		CFM		CFM		CFM		CFM	
			BHP	FEI	BHP	FEI	BHP	FEI	BHP	FEI	BHP	FEI	BHP	FEI	BHP	FEI	BHP	FEI	BHP	FEI	BHP	FEI	BHP	FEI
350	2474	5.4	3985		2155																			
			0.15	2.43	0.16	2.12																		
440	3109	8.2	4969		3911		3064																	
			0.29	1.7	0.34	1.88	0.33	1.83																
530	3743	11.5	5953		5126		4695																	
			0.51	1.24	0.59	1.48	0.6	1.58																
619	4378	15.0	6938		6269		5933		5070															
			0.8	0.95	0.94	1.16	0.95	1.28	0.96	1.44														
709	5012	18.5	7947		7310		7009		6387		5481													
			1.19	0.75	1.28	1	1.32	1.1	1.37	1.26	1.38	1.35												
799	5647	22	9011		8350		8104		7505		6900		6039		5279									
			1.65	0.62	1.7	0.87	1.77	0.94	1.87	1.1	1.92	1.21	1.92	1.28	1.86	1.26								
889	6282	26	10017		9480		9208		8713		8214		7599		7264		6368							
			2.25	0.51	2.5	0.66	2.53	0.76	2.61	0.92	2.67	1.04	2.71	1.14	2.72	1.18	2.67	1.21						
978	6916	31	10786		10421		10221		9843		9442		8967		8725		8174		7433		6877			
			3.06	0.41	3.83	0.49	3.63	0.6	3.57	0.76	3.61	0.88	3.66	1	3.68	1.04	3.71	1.11	3.69	1.16	3.63	1.16		
1068	7551	35	11724		11397		11201		10875		10483		10091		9830		9373		8851		8589		7806	
			3.99	0.34	4.11	0.49	4.18	0.57	4.29	0.69	4.41	0.81	4.51	0.9	4.57	0.96	4.65	1.03	4.69	1.09	4.7	1.11	4.67	1.13
1158	8185	40	12709		12426		12214		11930		11576		11223		11010		10656		10232		10019		9453	
			5.08	0.29	5.21	0.41	5.3	0.5	5.42	0.6	5.55	0.71	5.67	0.8	5.73	0.85	5.82	0.92	5.91	0.99	5.94	1.02	5.99	1.07
Maximum RPM 1158					Max HP: 10.00				Outlet Area (Sq.Ft.): 6.55				Wheel Diameter (in): 27				Tip Speed: 7.07 x RPM				Max Motor Frame Size: 215T			

Performance certified is for installation type A: Free inlet, Free outlet. Power rating (Bhp) does not include transmission losses. Performance ratings do not include the effects of appurtenances. The sound ratings shown are loudness values in fan sones at 5 ft. (1.5 m) in a hemispherical free field calculated per AMCA Standard 301. Values shown are for installation type A: Free inlet hemispherical sone levels. FEI calculation is based on default motor calculation in accordance with ANS/AMCA Standard 208.

PRU 270-050 BELT DRIVE

RPM	Tip Speed	Max Sones	0.00"SP		0.25"SP		0.62"SP		0.88"SP		1.25"SP		1.50"SP		1.75"SP		2.12"SP		2.38"SP		2.75"SP		3.00"SP	
			CFM		CFM		CFM		CFM		CFM		CFM		CFM		CFM		CFM		CFM		CFM	
			BHP	FEI	BHP	FEI	BHP	FEI	BHP	FEI	BHP	FEI	BHP	FEI	BHP	FEI	BHP	FEI	BHP	FEI	BHP	FEI	BHP	FEI
318	2245	4.0	2402																					
			0.07	2.72																				
423	2992	6.9	3195		2290																			
			0.16	1.93	0.2	1.89																		
529	3739	10.2	3988		3311																			
			0.3	1.37	0.37	1.54																		
635	4485	14.0	4781		4241		3238		1890															
			0.52	1.01	0.62	1.2	0.66	1.37	0.56	1.23														
740	5232	17.9	5574		5119		4367		3712															
			0.82	0.77	0.97	0.95	1.03	1.18	1.04	1.24														
846	5979	22	6367		6008		5345		4876		3968		2968											
			1.22	0.61	1.46	0.73	1.5	1	1.54	1.1	1.54	1.16	1.43	1.11										
951	6726	27	7161		6804		6225		5823		5110		4530		3772									
			1.73	0.49	1.84	0.66	1.98	0.88	2.06	0.98	2.14	1.08	2.14	1.11	2.05	1.09								
1057	7473	31	7956		7659		7114		6767		6222		5776		5281		4290							
			2.37	0.4	2.49	0.54	2.67	0.75	2.76	0.85	2.87	0.96	2.92	1.02	2.94	1.05	2.84	1.06						
1163	8219	36	8751		8479		7989		7662		7171		6844		6463		5809		5264		4065			
			3.16	0.33	3.28	0.46	3.49	0.65	3.6	0.75	3.75	0.86	3.82	0.92	3.88	0.97	3.91	1.02	3.87	1.03	3.59	0.99		
1268	8966	42	9547		9309		8833		8595		8120		7823		7525		6990		6574		5920		5326	
			4.1	0.28	4.23	0.38	4.47	0.56	4.58	0.64	4.77	0.76	4.87	0.83	4.94	0.88	5.04	0.94	5.07	0.98	5.05	1	4.95	1
Maximum RPM 1268.45					Max HP: 10.00				Outlet Area (Sq.Ft.): 6.55				Wheel Diameter (in): 27				Tip Speed: 7.07 x RPM				Max Motor Frame Size: 215T			

Performance certified is for installation type A: Free inlet, Free outlet. Power rating (Bhp) does not include transmission losses. Performance ratings do not include the effects of appurtenances. The sound ratings shown are loudness values in fan sones at 5 ft. (1.5 m) in a hemispherical free field calculated per AMCA Standard 301. Values shown are for installation type A: Free inlet hemispherical sone levels. FEI calculation is based on default motor calculation in accordance with ANS/AMCA Standard 208.

PRU 270-030 BELT DRIVE

RPM	Tip Speed	Max Sones	0.00"SP		0.38"SP		0.88"SP		1.25"SP		1.75"SP		2.12"SP		2.50"SP		3.00"SP		3.38"SP		3.88"SP		4.25"SP	
			CFM		CFM		CFM		CFM		CFM		CFM		CFM		CFM		CFM		CFM		CFM	
			BHP	FEI	BHP	FEI	BHP	FEI	BHP	FEI	BHP	FEI	BHP	FEI	BHP	FEI	BHP	FEI	BHP	FEI	BHP	FEI	BHP	FEI
350	2474	4.3	1758																					
			0.06	2.49																				
483	3412	7.8	2469		1440																			
			0.13	1.81	0.18	1.65																		
615	4350	11.9	3180		2366																			
			0.27	1.27	0.35	1.43																		
748	5287	16.5	3814		3247		2362																	
			0.5	0.87	0.61	1.13	0.69	1.23																
881	6225	21	4401		3977		3282		2640															
			0.83	0.63	0.91	0.94	1.04	1.11	1.1	1.13														
1013	7163	27	5101		4641		4059		3613		2862		1843											
			1.22	0.5	1.26	0.79	1.44	0.99	1.54	1.07	1.63	1.07	1.49	0.94										
1146	8101	32	5760		5423		4931		4539		4028		3561		3020									
			1.8	0.39	2.06	0.57	2.15	0.81	2.25	0.93	2.35	1.02	2.42	1.04	2.44	1.01								
1279	9038	39	6411		6159		5760		5413		4965		4608		4210		3602		2960					
			2.55	0.31	3.07	0.43	3.03	0.66	3.11	0.79	3.22	0.91	3.3	0.96	3.37	1	3.41	1	3.35	0.95				
1411	9976	46	7063		6828		6451		6169		5745		5415		5086		4615		4191		3532		2779	
			3.46	0.25	3.61	0.41	3.82	0.6	3.96	0.71	4.12	0.83	4.23	0.89	4.31	0.94	4.41	0.98	4.45	0.98	4.43	0.96	4.21	0.88
1544	10914	54	7727		7521		7212		6954		6542		6285		5976		5564		5255		4740		4328	
			4.53	0.21	4.69	0.34	4.91	0.5	5.07	0.61	5.28	0.74	5.39	0.8	5.51	0.86	5.65	0.92	5.73	0.94	5.82	0.96	5.84	0.96
Maximum RPM 1544					Max HP: 10.00				Outlet Area (Sq.Ft.): 6.55				Wheel Diameter (in): 27				Tip Speed: 7.07 x RPM				Max Motor Frame Size: 215T			

Performance certified is for installation type A: Free inlet, Free outlet. Power rating (Bhp) does not include transmission losses. Performance ratings do not include the effects of appurtenances. The sound ratings shown are loudness values in fan sones at 5 ft. (1.5 m) in a hemispherical free field calculated per AMCA Standard 301. Values shown are for installation type A: Free inlet hemispherical sone levels. FEI calculation is based on default motor calculation in accordance with ANS/AMCA Standard 208.

PRU 300-100 BELT DRIVE

RPM	Tip Speed	Max Sones	0.00"SP		0.12"SP		0.25"SP		0.50"SP		0.62"SP		0.75"SP		0.88"SP		1.00"SP		1.25"SP		1.38"SP		1.50"SP	
			CFM		CFM		CFM		CFM		CFM		CFM		CFM		CFM		CFM		CFM		CFM	
			BHP	FEI	BHP	FEI	BHP	FEI	BHP	FEI	BHP	FEI	BHP	FEI	BHP	FEI	BHP	FEI	BHP	FEI	BHP	FEI	BHP	FEI
286	2246	4.6	4508		3607																			
			0.17	2.47	0.17	2.6																		
369	2896	7.4	5793		5169		4381																	
			0.34	1.72	0.36	1.85	0.36	1.97																
451	3545	10.5	7077		6598		6028		4248															
			0.6	1.24	0.67	1.33	0.67	1.52	0.63	1.58														
534	4194	14.5	8362		7986		7539		6512		5832													
			0.99	0.93	1.14	0.97	1.11	1.17	1.12	1.38	1.11	1.42												
617	4843	18.3	9654		9275		8867		8116		7612		7102		6314									
			1.51	0.71	1.54	0.86	1.58	0.99	1.64	1.17	1.67	1.24	1.68	1.28	1.65	1.3								
699	5493	22	11097		10744		10381		9660		9301		8881		8400		7794							
			2.2	0.57	2.04	0.74	2.17	0.84	2.31	1.01	2.36	1.07	2.4	1.13	2.43	1.17	2.43	1.2						
782	6142	26	12540		12179		11831		11203		10854		10506		10157		9739		8693		7925		6599	
			3.09	0.46	2.62	0.66	2.9	0.73	3.12	0.87	3.2	0.94	3.26	0.99	3.31	1.04	3.35	1.08	3.38	1.13	3.32	1.14	3.1	1.1
865	6791	31	13868		13637		13328		12787		12478		12169		11860		11551		10779		10392		9929	
			4.18	0.38	4.22	0.46	4.29	0.55	4.4	0.69	4.46	0.77	4.52	0.83	4.57	0.88	4.61	0.93	4.68	1.02	4.7	1.05	4.7	1.07
947	7440	36	15194		14940		14686		14179		13925		13671		13417		13078		12486		12148		11809	
			5.49	0.32	5.55	0.4	5.62	0.47	5.74	0.6	5.8	0.66	5.86	0.71	5.92	0.76	5.99	0.82	6.09	0.91	6.13	0.94	6.16	0.98
1030	8090	41	16520		16336		16060		15600		15324		15140		14864		14588		14128		13852		13576	
			7.06	0.27	7.11	0.32	7.19	0.4	7.33	0.52	7.41	0.58	7.46	0.62	7.54	0.67	7.61	0.73	7.72	0.8	7.77	0.84	7.82	0.87
Maximum RPM 1030					Max HP: 10.00				Outlet Area (Sq.Ft.): 8.03				Wheel Diameter (in): 30				Tip Speed: 7.85 x RPM				Max Motor Frame Size: 215T			

Performance certified is for installation type A: Free inlet, Free outlet. Power rating (Bhp) does not include transmission losses. Performance ratings do not include the effects of appurtenances. The sound ratings shown are loudness values in fan sones at 5 ft. (1.5 m) in a hemispherical free field calculated per AMCA Standard 301. Values shown are for installation type A: Free inlet hemispherical sone levels. FEI calculation is based on default motor calculation in accordance with ANS/AMCA Standard 208.

PRU 300-080 BELT DRIVE

RPM	Tip Speed	Max Sones	0.00"SP		0.25"SP		0.38"SP		0.62"SP		0.88"SP		1.12"SP		1.25"SP		1.50"SP		1.75"SP		1.88"SP		2.12"SP	
			CFM		CFM		CFM		CFM		CFM		CFM		CFM		CFM		CFM		CFM		CFM	
			BHP	FEI	BHP	FEI	BHP	FEI	BHP	FEI	BHP	FEI	BHP	FEI	BHP	FEI	BHP	FEI	BHP	FEI	BHP	FEI	BHP	FEI
350	2749	6.7	5446		3827																			
			0.25	2.08	0.29	2.1																		
431	3388	9.7	6669		5496		4780																	
			0.47	1.47	0.54	1.69	0.54	1.75																
513	4026	13.5	7892		6986		6509		5064															
			0.78	1.09	0.9	1.32	0.91	1.43	0.9	1.52														
594	4665	17.1	9115		8394		7962		7097		5561													
			1.2	0.84	1.4	1.03	1.42	1.16	1.44	1.33	1.38	1.37												
675	5304	21	10415		9643		9248		8495		7613		5960											
			1.71	0.68	1.8	0.92	1.88	1.03	1.97	1.18	2	1.28	1.91	1.28										
757	5943	25	11736		10900		10576		9925		9205		8354		7763									
			2.35	0.56	2.38	0.81	2.49	0.89	2.63	1.03	2.72	1.14	2.76	1.22	2.74	1.24								
838	6582	29	12815		12224		11964		11423		10863		10221		9861		8992		7615					
			3.24	0.45	3.78	0.58	3.71	0.68	3.75	0.83	3.81	0.96	3.87	1.07	3.89	1.11	3.89	1.17	3.75	1.17				
919	7220	34	13840		13378		13147		12684		12222		11682		11374		10757		9986		9524		8059	
			4.31	0.37	4.47	0.54	4.54	0.62	4.68	0.75	4.8	0.86	4.92	0.96	4.97	1.01	5.05	1.08	5.08	1.13	5.06	1.14	4.85	1.13
1001	7859	39	15065		14645		14478		14058		13555		13135		12883		12380		11793		11457		10702	
			5.56	0.31	5.73	0.46	5.79	0.51	5.95	0.64	6.12	0.76	6.24	0.85	6.3	0.9	6.41	0.97	6.5	1.04	6.53	1.06	6.55	1.1
1082	8498	44	16289		15926		15745		15382		14928		14566		14293		13840		13386		13114		12570	
			7.02	0.27	7.2	0.39	7.28	0.45	7.44	0.55	7.63	0.67	7.77	0.75	7.86	0.8	7.99	0.88	8.11	0.94	8.16	0.97	8.24	1.02
Maximum RPM 1082					Max HP: 10.00				Outlet Area (Sq.Ft.): 8.03				Wheel Diameter (in): 30				Tip Speed: 7.85 x RPM				Max Motor Frame Size: 215T			

Performance certified is for installation type A: Free inlet, Free outlet. Power rating (Bhp) does not include transmission losses. Performance ratings do not include the effects of appurtenances. The sound ratings shown are loudness values in fan sones at 5 ft. (1.5 m) in a hemispherical free field calculated per AMCA Standard 301. Values shown are for installation type A: Free inlet hemispherical sone levels. FEI calculation is based on default motor calculation in accordance with ANS/AMCA Standard 208.

PRU 300-050 BELT DRIVE

RPM	Tip Speed	Max Sones	0.00"SP		0.38"SP		0.62"SP		1.00"SP		1.25"SP		1.62"SP		2.00"SP		2.25"SP		2.62"SP		2.88"SP		3.25"SP	
			CFM		CFM		CFM		CFM		CFM		CFM		CFM		CFM		CFM		CFM		CFM	
			BHP	FEI	BHP	FEI	BHP	FEI	BHP	FEI	BHP	FEI	BHP	FEI	BHP	FEI	BHP	FEI	BHP	FEI	BHP	FEI	BHP	FEI
286	2245	4.0	2965																					
			0.09	2.78																				
386	3029	7.2	3993		1892																			
			0.2	1.9	0.23	1.67																		
486	3813	10.6	5021		3737		2075																	
			0.4	1.33	0.5	1.53	0.44	1.36																
585	4598	15.0	6049		5070		4249																	
			0.69	0.96	0.84	1.24	0.87	1.33																
685	5382	19.3	7077		6241		5634		4450		2984													
			1.1	0.73	1.32	1	1.37	1.13	1.39	1.21	1.24	1.12												
785	6166	24	8105		7348		6843		5935		5178													
			1.65	0.57	1.83	0.85	1.92	0.98	2.02	1.11	2.03	1.14												
885	6950	29	9136		8453		7998		7316		6747		5723		4016									
			2.36	0.45	2.57	0.71	2.69	0.83	2.83	0.97	2.89	1.04	2.91	1.08	2.62	1.02								
985	7735	34	10167		9597		9154		8521		8078		7318		6432		5609							
			3.25	0.37	3.48	0.58	3.63	0.71	3.81	0.85	3.91	0.92	4.01	1	4.01	1.04	3.91	1.04						
1085	8519	40	11198		10640		10291		9734		9315		8757		7990		7502		6526		5619			
			4.34	0.3	4.61	0.5	4.76	0.6	4.98	0.74	5.11	0.82	5.25	0.9	5.36	0.97	5.38	1	5.29	1.01	5.07	0.99		
1184	9303	46	12229		11772		11391		10934		10553		10020		9411		9030		8269		7736		6746	
			5.66	0.25	5.92	0.41	6.13	0.52	6.35	0.64	6.52	0.72	6.71	0.81	6.87	0.89	6.94	0.92	7	0.97	6.98	0.98	6.8	0.98
Maximum RPM 1184.5					Max HP: 10.00				Outlet Area (Sq.Ft.): 8.03				Wheel Diameter (in): 30				Tip Speed: 7.85 x RPM				Max Motor Frame Size: 215T			

Performance certified is for installation type A: Free inlet, Free outlet. Power rating (Bhp) does not include transmission losses. Performance ratings do not include the effects of appurtenances. The sound ratings shown are loudness values in fan sones at 5 ft. (1.5 m) in a hemispherical free field calculated per AMCA Standard 301. Values shown are for installation type A: Free inlet hemispherical sone levels. FEI calculation is based on default motor calculation in accordance with ANS/AMCA Standard 208.

PRU 300-030 BELT DRIVE

RPM	Tip Speed	Max Sones	0.00"SP		0.38"SP		0.88"SP		1.25"SP		1.75"SP		2.12"SP		2.50"SP		3.00"SP		3.38"SP		3.88"SP		4.25"SP	
			CFM		CFM		CFM		CFM		CFM		CFM		CFM		CFM		CFM		CFM		CFM	
			BHP	FEI	BHP	FEI	BHP	FEI	BHP	FEI	BHP	FEI	BHP	FEI	BHP	FEI	BHP	FEI	BHP	FEI	BHP	FEI	BHP	FEI
350	2749	5.4	2427																					
			0.09	2.33																				
471	3702	9.1	3319		2175																			
			0.21	1.62	0.28	1.59																		
593	4655	13.8	4212		3265		1633																	
			0.41	1.13	0.51	1.33	0.52	1.17																
714	5608	18.6	4953		4325		3334		2391															
			0.75	0.76	0.89	1.04	1.01	1.17	1	1.12														
835	6561	24	5743		5181		4420		3742		2446													
			1.18	0.57	1.27	0.88	1.45	1.06	1.55	1.1	1.5	1.01												
957	7514	30	6608		6097		5437		4949		4196		3445											
			1.74	0.45	1.95	0.67	2.12	0.9	2.23	1	2.36	1.05	2.4	1.02										
1078	8467	36	7425		7059		6484		6028		5413		4905		4353		3262							
			2.56	0.35	2.98	0.5	3.05	0.74	3.16	0.87	3.3	0.97	3.39	1.01	3.44	1.01	3.36	0.94						
1199	9420	42	8241		7938		7484		7097		6578		6171		5710		5031		4421		3323			
			3.58	0.28	4.38	0.4	4.27	0.61	4.36	0.74	4.49	0.85	4.59	0.92	4.68	0.96	4.77	0.98	4.77	0.97	4.56	0.89		
1321	10372	50	9066		8764		8341		8039		7556		7132		6770		6226		5743		5017		4413	
			4.8	0.23	5.02	0.39	5.27	0.56	5.43	0.66	5.65	0.77	5.8	0.85	5.92	0.9	6.06	0.94	6.14	0.96	6.19	0.96	6.12	0.93
1442	11325	59	9899		9635		9239		8976		8514		8184		7854		7392		6996		6468		6006	
			6.24	0.19	6.48	0.33	6.78	0.48	6.95	0.57	7.22	0.69	7.38	0.76	7.53	0.82	7.71	0.87	7.83	0.91	7.96	0.94	8.03	0.95
Maximum RPM 1442					Max HP: 10.00				Outlet Area (Sq.Ft.): 8.03				Wheel Diameter (in): 30				Tip Speed: 7.85 x RPM				Max Motor Frame Size: 215T			

Performance certified is for installation type A: Free inlet, Free outlet. Power rating (Bhp) does not include transmission losses. Performance ratings do not include the effects of appurtenances. The sound ratings shown are loudness values in fan sones at 5 ft. (1.5 m) in a hemispherical free field calculated per AMCA Standard 301. Values shown are for installation type A: Free inlet hemispherical sone levels. FEI calculation is based on default motor calculation in accordance with ANS/AMCA Standard 208.

PRU 330-100 BELT DRIVE

RPM	Tip Speed	Max Sones	0.00"SP		0.12"SP		0.25"SP		0.50"SP		0.62"SP		0.75"SP		0.88"SP		1.00"SP		1.25"SP		1.38"SP		1.50"SP	
			CFM		CFM		CFM		CFM		CFM		CFM		CFM		CFM		CFM		CFM		CFM	
			BHP	FEI	BHP	FEI	BHP	FEI	BHP	FEI	BHP	FEI	BHP	FEI	BHP	FEI	BHP	FEI	BHP	FEI	BHP	FEI	BHP	FEI
260	2246	4.7	5455		4365																			
			0.2	2.49	0.2	2.62																		
336	2902	7.5	7024		6269		5313																	
			0.41	1.72	0.44	1.85	0.44	1.96																
412	3558	10.8	8594		8013		7366		5255															
			0.74	1.23	0.82	1.32	0.82	1.5	0.78	1.58														
488	4213	14.4	10163		9708		9164		7971		7145		5086											
			1.21	0.91	1.4	0.96	1.36	1.16	1.37	1.37	1.36	1.41	1.2	1.31										
564	4869	18.9	11750		11286		10851		9873		9322		8638		7743									
			1.85	0.7	1.88	0.85	1.93	0.96	2.02	1.16	2.05	1.23	2.07	1.28	2.04	1.29								
639	5524	23	13513		13081		12638		11760		11321		10810		10296		9558		6454					
			2.7	0.56	2.5	0.73	2.67	0.83	2.84	1	2.9	1.06	2.95	1.12	2.98	1.16	2.99	1.19	2.6	1.11				
715	6180	27	15271		14931		14590		13825		13400		12974		12549		12039		10848		10082		8892	
			3.81	0.45	3.86	0.55	3.92	0.64	4.05	0.81	4.12	0.88	4.17	0.95	4.22	1	4.26	1.05	4.28	1.11	4.24	1.13	4.09	1.11
791	6836	32	16891		16609		16232		15574		15197		14821		14445		14069		13222		12751		12187	
			5.15	0.37	5.21	0.45	5.29	0.54	5.43	0.69	5.5	0.76	5.57	0.82	5.63	0.88	5.69	0.92	5.77	1	5.8	1.03	5.8	1.06
867	7491	37	18511		18202		17892		17274		16964		16655		16346		16036		15315		14902		14490	
			6.78	0.31	6.86	0.39	6.94	0.46	7.09	0.59	7.17	0.65	7.24	0.71	7.31	0.76	7.38	0.8	7.5	0.89	7.56	0.93	7.6	0.96
943	8147	43	20131		19907		19570		19010		18785		18449		18113		17888		17216		16879		16543	
			8.72	0.26	8.79	0.32	8.89	0.39	9.06	0.51	9.12	0.55	9.22	0.61	9.31	0.67	9.37	0.7	9.54	0.79	9.61	0.83	9.67	0.87
Maximum RPM 943					Max HP: 10.00				Outlet Area (Sq.Ft.): 9.69				Wheel Diameter (in): 33				Tip Speed: 8.64 x RPM				Max Motor Frame Size: 215T			

Performance certified is for installation type A: Free inlet, Free outlet. Power rating (Bhp) does not include transmission losses. Performance ratings do not include the effects of appurtenances. The sound ratings shown are loudness values in fan sones at 5 ft. (1.5 m) in a hemispherical free field calculated per AMCA Standard 301. Values shown are for installation type A: Free inlet hemispherical sone levels. FEI calculation is based on default motor calculation in accordance with ANS/AMCA Standard 208.

PRU 330-080 BELT DRIVE

RPM	Tip Speed	Max Sones	0.00"SP		0.38"SP		0.75"SP		1.12"SP		1.50"SP		1.88"SP		2.25"SP		2.62"SP		3.00"SP		3.38"SP		3.75"SP	
			CFM		CFM		CFM		CFM		CFM		CFM		CFM		CFM		CFM		CFM		CFM	
			BHP	FEI	BHP	FEI	BHP	FEI	BHP	FEI	BHP	FEI	BHP	FEI	BHP	FEI	BHP	FEI	BHP	FEI	BHP	FEI	BHP	FEI
350	3024	8.0	7227		3995																			
			0.4	1.78	0.44	1.8																		
421	3637	11.1	8648		6664																			
			0.7	1.3	0.82	1.63																		
492	4251	15.2	10069		8490		5651																	
			1.1	0.99	1.3	1.33	1.22	1.41																
563	4864	18.7	11500		10111		8420																	
			1.64	0.77	1.83	1.13	1.9	1.34																
634	5477	22	13036		11684		10306		8247															
			2.26	0.64	2.45	0.97	2.62	1.19	2.61	1.28														
705	6091	26	14571		13186		11971		10592		7751													
			3.05	0.54	3.19	0.85	3.46	1.05	3.58	1.19	3.35	1.18												
776	6704	31	15728		14817		13829		12699		11365		8777											
			4.15	0.43	4.83	0.63	4.85	0.87	4.97	1.04	5.01	1.15	4.7	1.14										
847	7318	36	16972		16216		15365		14420		13286		11868		8937									
			5.43	0.36	5.69	0.58	5.95	0.78	6.18	0.94	6.35	1.06	6.39	1.13	5.86	1.09								
918	7931	41	18395		17678		16858		16038		15219		14092		12657		9994							
			6.91	0.3	7.2	0.51	7.5	0.7	7.76	0.84	7.95	0.95	8.11	1.05	8.12	1.1	7.57	1.07						
989	8544	46	19818		19155		18383		17720		16948		16065		14961		13636		11318					
			8.64	0.26	8.96	0.44	9.29	0.62	9.55	0.74	9.8	0.86	10.02	0.96	10.16	1.04	10.15	1.08	9.66	1.06				
Maximum RPM 989					Max HP: 10.00				Outlet Area (Sq.Ft.): 9.69				Wheel Diameter (in): 33				Tip Speed: 8.64 x RPM				Max Motor Frame Size: 215T			

Performance certified is for installation type A: Free inlet, Free outlet. Power rating (Bhp) does not include transmission losses. Performance ratings do not include the effects of appurtenances. The sound ratings shown are loudness values in fan sones at 5 ft. (1.5 m) in a hemispherical free field calculated per AMCA Standard 301. Values shown are for installation type A: Free inlet hemispherical sone levels. FEI calculation is based on default motor calculation in accordance with ANS/AMCA Standard 208.

PRU 330-050 BELT DRIVE

RPM	Tip Speed	Max Sones	0.00"SP		0.38"SP		0.62"SP		1.00"SP		1.25"SP		1.62"SP		2.00"SP		2.25"SP		2.62"SP		2.88"SP		3.25"SP	
			CFM		CFM		CFM		CFM		CFM		CFM		CFM		CFM		CFM		CFM		CFM	
			BHP	FEI	BHP	FEI	BHP	FEI	BHP	FEI	BHP	FEI	BHP	FEI	BHP	FEI	BHP	FEI	BHP	FEI	BHP	FEI	BHP	FEI
260	2245	4.1	3588																					
			0.11	2.83																				
351	3036	7.3	4842		2325																			
			0.25	1.9	0.29	1.66																		
443	3827	10.9	6097		4575		2596																	
			0.49	1.31	0.61	1.52	0.54	1.35																
534	4617	15.6	7351		6161		5163																	
			0.85	0.95	1.03	1.23	1.07	1.32																
626	5408	19.9	8605		7642		6903		5465		3736													
			1.35	0.71	1.62	0.97	1.68	1.12	1.71	1.2	1.54	1.11												
718	6199	25	9860		8939		8325		7281		6360		3904											
			2.03	0.55	2.25	0.84	2.36	0.97	2.49	1.09	2.5	1.13	2.15	1.03										
809	6990	30	11118		10356		9802		8902		8210		7033		5094									
			2.9	0.44	3.14	0.68	3.29	0.81	3.48	0.96	3.56	1.03	3.58	1.07	3.28	1.02								
901	7781	35	12376		11682		11143		10449		9909		8985		7906		6904							
			4	0.36	4.28	0.57	4.47	0.7	4.68	0.83	4.8	0.91	4.93	0.99	4.95	1.03	4.83	1.03						
992	8572	41	13633		13039		12530		11851		11426		10662		9813		9219		8030		7011			
			5.35	0.3	5.64	0.47	5.87	0.6	6.14	0.73	6.28	0.8	6.47	0.89	6.6	0.96	6.63	0.99	6.54	1	6.31	0.99		
1084	9362	48	14891		14335		13871		13315		12851		12202		11553		10997		10162		9513		8400	
			6.98	0.25	7.3	0.4	7.56	0.52	7.83	0.63	8.04	0.71	8.27	0.8	8.46	0.87	8.56	0.91	8.63	0.96	8.62	0.98	8.44	0.98

Maximum RPM 1083.68755	Max HP: 10.00	Outlet Area (Sq.Ft.): 9.69	Wheel Diameter (in): 33	Tip Speed: 8.64 x RPM	Max Motor Frame Size: 215T

Performance certified is for installation type A: Free inlet, Free outlet. Power rating (Bhp) does not include transmission losses. Performance ratings do not include the effects of appurtenances. The sound ratings shown are loudness values in fan sones at 5 ft. (1.5 m) in a hemispherical free field calculated per AMCA Standard 301. Values shown are for installation type A: Free inlet hemispherical sone levels. FEI calculation is based on default motor calculation in accordance with ANS/AMCA Standard 208.

PRU 330-030 BELT DRIVE

RPM	Tip Speed	Max Sones	0.00"SP		0.38"SP		0.88"SP		1.25"SP		1.75"SP		2.12"SP		2.50"SP		3.00"SP		3.38"SP		3.88"SP		4.25"SP	
			CFM		CFM		CFM		CFM		CFM		CFM		CFM		CFM		CFM		CFM		CFM	
			BHP	FEI	BHP	FEI	BHP	FEI	BHP	FEI	BHP	FEI	BHP	FEI	BHP	FEI	BHP	FEI	BHP	FEI	BHP	FEI	BHP	FEI
350	3024	6.5	3248		1317																			
			0.14	2.12	0.19	1.55																		
458	3954	10.4	4302		3013																			
			0.3	1.46	0.41	1.52																		
565	4884	15.4	5327		4291		2789																	
			0.58	1.02	0.73	1.22	0.8	1.23																
673	5814	20	6183		5511		4358		3338															
			1.02	0.7	1.19	0.97	1.35	1.13	1.38	1.11														
781	6744	25	7154		6473		5538		4798		3414													
			1.54	0.54	1.64	0.84	1.88	1.03	2	1.08	2.02	1.02												
888	7675	31	8163		7546		6785		6180		5355		4535		3229									
			2.26	0.43	2.55	0.64	2.73	0.87	2.87	0.97	3.02	1.03	3.1	1.02	2.94	0.91								
996	8605	38	9127		8687		8044		7484		6789		6161		5480		4380							
			3.26	0.33	3.82	0.48	3.88	0.71	4.01	0.84	4.17	0.94	4.29	0.99	4.37	1	4.34	0.95						
1104	9535	45	10092		9782		9174		8768		8134		7634		7068		6303		5620		4409			
			4.49	0.27	5.63	0.36	5.38	0.6	5.47	0.71	5.63	0.83	5.75	0.9	5.87	0.95	5.98	0.97	6	0.97	5.83	0.9		
1211	10465	52	11068		10773		10257		9814		9224		8781		8339		7675		7084		6273		5535	
			5.96	0.22	6.18	0.35	6.51	0.53	6.75	0.65	7.02	0.77	7.19	0.83	7.33	0.88	7.51	0.93	7.63	0.95	7.69	0.95	7.63	0.93
1319	11395	61	12052		11731		11329		10927		10445		10044		9562		8999		8517		7875		7393	
			7.69	0.19	7.98	0.32	8.29	0.45	8.57	0.56	8.85	0.67	9.06	0.74	9.28	0.81	9.5	0.87	9.65	0.9	9.81	0.93	9.89	0.94

Maximum RPM 1319	Max HP: 10.00	Outlet Area (Sq.Ft.): 9.69	Wheel Diameter (in): 33	Tip Speed: 8.64 x RPM	Max Motor Frame Size: 215T

Performance certified is for installation type A: Free inlet, Free outlet. Power rating (Bhp) does not include transmission losses. Performance ratings do not include the effects of appurtenances. The sound ratings shown are loudness values in fan sones at 5 ft. (1.5 m) in a hemispherical free field calculated per AMCA Standard 301. Values shown are for installation type A: Free inlet hemispherical sone levels. FEI calculation is based on default motor calculation in accordance with ANS/AMCA Standard 208.

PRU 365-100 BELT DRIVE

RPM	Tip Speed	Max Sones	0.00"SP		0.12"SP		0.25"SP		0.50"SP		0.62"SP		0.75"SP		0.88"SP		1.00"SP		1.25"SP		1.38"SP		1.50"SP	
			CFM		CFM		CFM		CFM		CFM		CFM		CFM		CFM		CFM		CFM		CFM	
			BHP	FEI	BHP	FEI	BHP	FEI	BHP	FEI	BHP	FEI	BHP	FEI	BHP	FEI	BHP	FEI	BHP	FEI	BHP	FEI	BHP	FEI
235	2246	4.8	6671		5337																			
			0.24	2.52	0.24	2.64																		
296	2831	7.2	8385		7433		6197																	
			0.47	1.79	0.5	1.92	0.49	2.02																
357	3416	10.1	10098		9356		8485																	
			0.8	1.31	0.89	1.42	0.88	1.6																
419	4001	13.6	11811		11213		10517		8869		7439													
			1.27	1	1.45	1.06	1.42	1.25	1.43	1.45	1.38	1.45												
480	4586	17.0	13524		12997		12418		11124		10400		9446		7473									
			1.9	0.78	2.24	0.82	2.15	1	2.16	1.22	2.17	1.29	2.16	1.32	1.99	1.28								
541	5171	21	15368		14817		14239		13177		12524		11867		11038		9855							
			2.71	0.63	2.64	0.79	2.76	0.9	2.9	1.07	2.96	1.15	3	1.2	3.01	1.23	2.96	1.24						
602	5756	25	17292		16723		16246		15203		14729		14161		13498		12737		10628					
			3.75	0.51	3.39	0.7	3.62	0.78	3.88	0.94	3.96	1	4.04	1.06	4.1	1.11	4.13	1.15	4.02	1.16				
664	6341	29	19168		18740		18312		17350		16923		16495		15961		15319		14037		13182		12113	
			5.03	0.43	5.11	0.52	5.18	0.61	5.35	0.79	5.42	0.85	5.49	0.9	5.55	0.96	5.62	1.02	5.67	1.09	5.64	1.1	5.55	1.11
725	6926	33	20936		20586		20119		19301		18951		18484		18017		17550		16499		15916		15332	
			6.56	0.36	6.63	0.43	6.73	0.53	6.91	0.68	6.98	0.73	7.07	0.8	7.15	0.85	7.22	0.9	7.34	0.99	7.37	1.02	7.39	1.04
786	7511	38	22704		22325		21945		21185		20805		20425		20045		19666		18779		18273		17766	
			8.36	0.31	8.45	0.38	8.55	0.46	8.75	0.59	8.84	0.65	8.93	0.7	9.02	0.75	9.09	0.8	9.25	0.89	9.32	0.93	9.37	0.96
Maximum RPM 786					Max HP: 10.00				Outlet Area (Sq.Ft.): 11.88				Wheel Diameter (in): 36.5				Tip Speed: 9.56 x RPM				Max Motor Frame Size: 215T			

Performance certified is for installation type A: Free inlet, Free outlet. Power rating (Bhp) does not include transmission losses. Performance ratings do not include the effects of appurtenances. The sound ratings shown are loudness values in fan sones at 5 ft. (1.5 m) in a hemispherical free field calculated per AMCA Standard 301. Values shown are for installation type A: Free inlet hemispherical sone levels. FEI calculation is based on default motor calculation in accordance with ANS/AMCA Standard 208.

PRU 365-080 BELT DRIVE

RPM	Tip Speed	Max Sones	0.00"SP		0.25"SP		0.38"SP		0.62"SP		0.88"SP		1.12"SP		1.25"SP		1.50"SP		1.75"SP		1.88"SP		2.12"SP	
			CFM		CFM		CFM		CFM		CFM		CFM		CFM		CFM		CFM		CFM		CFM	
			BHP	FEI	BHP	FEI	BHP	FEI	BHP	FEI	BHP	FEI	BHP	FEI	BHP	FEI	BHP	FEI	BHP	FEI	BHP	FEI	BHP	FEI
350	3344	9.7	9750		8029		6928																	
			0.66	1.5	0.77	1.72	0.77	1.76																
403	3849	12.6	11179		9757		8952		5861															
			1	1.17	1.17	1.4	1.18	1.52	1.08	1.47														
456	4353	15.5	12608		11391		10780		9140															
			1.45	0.94	1.69	1.16	1.71	1.27	1.72	1.43														
508	4857	19.2	14049		12886		12353		11091		9238													
			1.99	0.77	2.17	1.03	2.23	1.13	2.31	1.29	2.29	1.36												
561	5362	22	15593		14425		13918		12793		11475		9267											
			2.61	0.66	2.74	0.91	2.85	1	2.99	1.16	3.05	1.27	2.95	1.27										
614	5866	26	17138		15931		15459		14414		13363		12021		11062									
			3.36	0.57	3.4	0.81	3.55	0.89	3.77	1.04	3.89	1.15	3.94	1.23	3.9	1.24								
667	6370	29	18502		17553		17060		16256		15337		14305		13683		12126							
			4.31	0.48	4.86	0.63	4.87	0.73	4.98	0.87	5.1	1	5.18	1.11	5.2	1.15	5.14	1.19						
719	6875	33	19619		18939		18571		17880		17042		16174		15733		14731		13272		12375			
			5.5	0.4	6.84	0.49	6.48	0.6	6.4	0.75	6.47	0.89	6.57	1	6.6	1.04	6.65	1.11	6.6	1.15	6.5	1.15		
772	7379	37	20938		20355		20005		19305		18606		17789		17439		16506		15457		14874		13125	
			6.81	0.35	7.02	0.49	7.14	0.57	7.36	0.71	7.56	0.83	7.75	0.93	7.82	0.97	7.95	1.05	8.02	1.1	8.02	1.12	7.85	1.12
825	7883	41	22369		21746		21497		20874		20251		19503		19130		18382		17510		17012		16015	
			8.3	0.3	8.56	0.45	8.65	0.51	8.89	0.63	9.1	0.74	9.32	0.84	9.42	0.89	9.58	0.96	9.71	1.03	9.76	1.05	9.78	1.09
Maximum RPM 825					Max HP: 10.00				Outlet Area (Sq.Ft.): 11.88				Wheel Diameter (in): 36.5				Tip Speed: 9.56 x RPM				Max Motor Frame Size: 215T			

Performance certified is for installation type A: Free inlet, Free outlet. Power rating (Bhp) does not include transmission losses. Performance ratings do not include the effects of appurtenances. The sound ratings shown are loudness values in fan sones at 5 ft. (1.5 m) in a hemispherical free field calculated per AMCA Standard 301. Values shown are for installation type A: Free inlet hemispherical sone levels. FEI calculation is based on default motor calculation in accordance with ANS/AMCA Standard 208.

PRU 365-050 BELT DRIVE

RPM	Tip Speed	Max Sones	0.00"SP		0.25"SP		0.62"SP		0.88"SP		1.25"SP		1.50"SP		1.75"SP		2.12"SP		2.38"SP		2.75"SP		3.00"SP	
			CFM		CFM		CFM		CFM		CFM		CFM		CFM		CFM		CFM		CFM		CFM	
			BHP	FEI	BHP	FEI	BHP	FEI	BHP	FEI	BHP	FEI	BHP	FEI	BHP	FEI	BHP	FEI	BHP	FEI	BHP	FEI	BHP	FEI
235	2245	4.2	4389																					
			0.13	2.87																				
309	2955	7.0	5767		4063																			
			0.28	1.98	0.35	1.89																		
384	3665	10.4	7146		5889																			
			0.53	1.41	0.63	1.55																		
458	4376	14.0	8524		7507		5560																	
			0.88	1.04	1.05	1.23	1.11	1.36																
532	5086	18.7	9902		9094		7574		6346															
			1.38	0.79	1.63	0.96	1.73	1.2	1.74	1.24														
607	5796	23	11280		10574		9330		8429		6534													
			2.03	0.62	2.43	0.77	2.51	1.02	2.57	1.11	2.54	1.15												
681	6507	27	12661		11951		10847		10138		8719		7536		5565									
			2.86	0.5	3.06	0.69	3.32	0.91	3.43	1	3.54	1.09	3.5	1.1	3.18	1.03								
755	7217	32	14043		13431		12469		11769		10720		9845		8796		6522							
			3.91	0.41	4.12	0.57	4.41	0.77	4.58	0.88	4.76	0.98	4.83	1.03	4.82	1.06	4.44	1.01						
830	7927	38	15425		14848		13984		13408		12447		11775		11006		9661		8413					
			5.18	0.34	5.42	0.49	5.75	0.67	5.94	0.76	6.19	0.88	6.31	0.94	6.39	0.99	6.39	1.02	6.21	1.01				
904	8637	43	16807		16283		15551		14923		14086		13562		12934		11888		11050		9481		8120	
			6.7	0.29	6.96	0.42	7.31	0.57	7.57	0.68	7.86	0.79	8	0.85	8.14	0.9	8.28	0.96	8.29	0.99	8.1	0.99	7.73	0.97

Maximum RPM 903.9	Max HP: 10.00	Outlet Area (Sq.Ft.): 11.88	Wheel Diameter (in): 36.5	Tip Speed: 9.56 x RPM	Max Motor Frame Size: 215T

Performance certified is for installation type A: Free inlet, Free outlet. Power rating (Bhp) does not include transmission losses. Performance ratings do not include the effects of appurtenances. The sound ratings shown are loudness values in fan sones at 5 ft. (1.5 m) in a hemispherical free field calculated per AMCA Standard 301. Values shown are for installation type A: Free inlet hemispherical sone levels. FEI calculation is based on default motor calculation in accordance with ANS/AMCA Standard 208.

PRU 365-030 BELT DRIVE

RPM	Tip Speed	Max Sones	0.00"SP		0.38"SP		0.88"SP		1.25"SP		1.75"SP		2.12"SP		2.50"SP		3.00"SP		3.38"SP		3.88"SP		4.25"SP	
			CFM		CFM		CFM		CFM		CFM		CFM		CFM		CFM		CFM		CFM		CFM	
			BHP	FEI	BHP	FEI	BHP	FEI	BHP	FEI	BHP	FEI	BHP	FEI	BHP	FEI	BHP	FEI	BHP	FEI	BHP	FEI	BHP	FEI
350	3344	7.9	4418		2494																			
			0.23	1.87	0.32	1.61																		
433	4141	11.5	5522		4015																			
			0.43	1.35	0.56	1.45																		
517	4937	16.2	6576		5341		3529																	
			0.73	0.98	0.92	1.2	1.02	1.22																
600	5733	20	7473		6606		5182		3858															
			1.19	0.71	1.39	0.99	1.58	1.13	1.6	1.1														
683	6530	25	8458		7648		6461		5481															
			1.73	0.56	1.87	0.86	2.13	1.05	2.27	1.08														
767	7326	30	9544		8751		7741		6996		5773		4550											
			2.37	0.47	2.64	0.69	2.9	0.92	3.06	1.01	3.26	1.04	3.27	0.97										
850	8122	35	10554		9933		9005		8344		7381		6545		5541									
			3.32	0.37	3.76	0.55	3.96	0.79	4.12	0.9	4.33	0.99	4.45	1.01	4.49	0.98								
933	8919	41	11564		11070		10276		9684		8809		8138		7408		6171							
			4.46	0.3	5.21	0.45	5.27	0.67	5.43	0.79	5.65	0.91	5.79	0.96	5.9	0.98	5.96	0.96						
1017	9715	48	12574		12155		11526		10966		10232		9635		8968		8021		7236		5972			
			5.83	0.25	7.04	0.37	6.89	0.57	7.03	0.69	7.23	0.81	7.39	0.88	7.53	0.93	7.68	0.96	7.74	0.96	7.63	0.92		
1100	10511	54	13600		13222		12540		12085		11404		10798		10267		9434		8752		7768		6934	
			7.39	0.22	7.68	0.35	8.11	0.54	8.35	0.64	8.67	0.75	8.9	0.83	9.08	0.87	9.31	0.92	9.45	0.94	9.53	0.94	9.48	0.92

Maximum RPM 1100	Max HP: 10.00	Outlet Area (Sq.Ft.): 11.88	Wheel Diameter (in): 36.5	Tip Speed: 9.56 x RPM	Max Motor Frame Size: 215T

Performance certified is for installation type A: Free inlet, Free outlet. Power rating (Bhp) does not include transmission losses. Performance ratings do not include the effects of appurtenances. The sound ratings shown are loudness values in fan sones at 5 ft. (1.5 m) in a hemispherical free field calculated per AMCA Standard 301. Values shown are for installation type A: Free inlet hemispherical sone levels. FEI calculation is based on default motor calculation in accordance with ANS/AMCA Standard 208.

PRU 402-100 BELT DRIVE

RPM	Tip Speed	Max Sones	0.00"SP		0.12"SP		0.25"SP		0.50"SP		0.62"SP		0.75"SP		0.88"SP		1.00"SP		1.25"SP		1.38"SP		1.50"SP	
			CFM		CFM		CFM		CFM		CFM		CFM		CFM		CFM		CFM		CFM		CFM	
			BHP	FEI	BHP	FEI	BHP	FEI	BHP	FEI	BHP	FEI	BHP	FEI	BHP	FEI	BHP	FEI	BHP	FEI	BHP	FEI	BHP	FEI
214	2255	4.9	8146		6562																			
			0.3	2.52	0.3	2.65																		
266	2804	7.2	10102		8899		7408																	
			0.55	1.82	0.59	1.96	0.58	2.04																
318	3353	9.9	12057		11105		10063																	
			0.92	1.35	1.02	1.47	1.02	1.64																
370	3902	13.1	14013		13226		12399		10212		7951													
			1.44	1.04	1.63	1.12	1.6	1.3	1.61	1.48	1.5	1.43												
422	4451	16.5	15968		15343		14574		12958		11929		10530											
			2.12	0.82	2.49	0.85	2.38	1.05	2.41	1.27	2.41	1.33	2.37	1.35										
475	5001	20	18007		17379		16610		15285		14432		13572		12404		10387							
			2.98	0.66	2.97	0.8	3.08	0.94	3.23	1.12	3.29	1.19	3.32	1.24	3.31	1.26	3.14	1.23						
527	5550	24	20204		19555		18892		17685		17028		16260		15381		14386		10318					
			4.08	0.55	3.76	0.72	4.02	0.82	4.27	0.98	4.36	1.04	4.44	1.1	4.5	1.15	4.51	1.18	4.06	1.12				
579	6099	28	22400		21759		21136		20015		19393		18770		18023		17276		15407		13910		11036	
			5.44	0.46	4.64	0.65	5.12	0.72	5.5	0.86	5.64	0.93	5.75	0.99	5.85	1.04	5.92	1.08	5.95	1.13	5.83	1.13	5.29	1.06
631	6648	32	24438		24029		23484		22393		21848		21303		20758		20077		18714		17896		16942	
			7.05	0.39	7.13	0.46	7.24	0.55	7.45	0.72	7.55	0.79	7.65	0.85	7.73	0.9	7.82	0.95	7.92	1.03	7.94	1.06	7.92	1.08
683	7197	37	26456		26014		25571		24538		24096		23653		23063		22620		21440		20702		20112	
			8.95	0.33	9.05	0.41	9.15	0.48	9.39	0.63	9.49	0.69	9.59	0.74	9.7	0.8	9.78	0.84	9.95	0.93	10.03	0.97	10.06	1
Maximum RPM 683					Max HP: 10.00				Outlet Area (Sq.Ft.): 14.47				Wheel Diameter (in): 40.25				Tip Speed: 10.54 x RPM				Max Motor Frame Size: 215T			

Performance certified is for installation type A: Free inlet, Free outlet. Power rating (Bhp) does not include transmission losses. Performance ratings do not include the effects of appurtenances. The sound ratings shown are loudness values in fan sones at 5 ft. (1.5 m) in a hemispherical free field calculated per AMCA Standard 301. Values shown are for installation type A: Free inlet hemispherical sone levels. FEI calculation is based on default motor calculation in accordance with ANS/AMCA Standard 208.

PRU 402-080 BELT DRIVE

RPM	Tip Speed	Max Sones	0.00"SP		0.25"SP		0.50"SP		0.75"SP		1.00"SP		1.25"SP		1.50"SP		1.75"SP		2.00"SP		2.25"SP		2.50"SP	
			CFM		CFM		CFM		CFM		CFM		CFM		CFM		CFM		CFM		CFM		CFM	
			BHP	FEI	BHP	FEI	BHP	FEI	BHP	FEI	BHP	FEI	BHP	FEI	BHP	FEI	BHP	FEI	BHP	FEI	BHP	FEI	BHP	FEI
350	3688	11.7	13040		11220		8711																	
			1.08	1.27	1.25	1.49	1.25	1.62																
391	4118	14.3	14521		12941		11086																	
			1.49	1.04	1.73	1.26	1.77	1.47																
432	4547	17.0	16002		14644		13081		10970															
			2	0.86	2.34	1.06	2.38	1.29	2.37	1.4														
472	4977	19.7	17529		16135		14790		13102		9995													
			2.59	0.74	2.8	0.99	2.95	1.18	3.02	1.31	2.86	1.3												
513	5407	23	19130		17685		16428		15036		13199													
			3.25	0.65	3.41	0.9	3.64	1.07	3.77	1.2	3.79	1.28												
554	5837	26	20730		19277		18020		16750		15360		13271											
			4.02	0.57	4.08	0.81	4.42	0.97	4.62	1.11	4.71	1.2	4.66	1.24										
595	6266	29	22219		21019		19805		18700		17464		16100		13989									
			4.97	0.5	5.49	0.65	5.67	0.84	5.84	0.98	5.95	1.09	5.99	1.17	5.88	1.2								
635	6696	32	23376		22474		21541		20548		19521		18342		16886		14761							
			6.15	0.42	7.43	0.52	7.11	0.71	7.18	0.86	7.3	0.98	7.39	1.07	7.42	1.14	7.27	1.16						
676	7126	36	24587		23765		22943		22122		21163		20068		18972		17466		15275					
			7.45	0.37	7.73	0.54	7.98	0.68	8.21	0.81	8.43	0.92	8.62	1.02	8.74	1.08	8.78	1.13	8.58	1.13				
717	7555	39	26069		25343		24472		23746		22875		22004		20987		19681		18229		16196			
			8.89	0.33	9.16	0.47	9.46	0.63	9.7	0.74	9.94	0.84	10.14	0.93	10.32	1.01	10.45	1.07	10.46	1.11	10.23	1.11		
Maximum RPM 717					Max HP: 10.00				Outlet Area (Sq.Ft.): 14.47				Wheel Diameter (in): 40.25				Tip Speed: 10.54 x RPM				Max Motor Frame Size: 215T			

Performance certified is for installation type A: Free inlet, Free outlet. Power rating (Bhp) does not include transmission losses. Performance ratings do not include the effects of appurtenances. The sound ratings shown are loudness values in fan sones at 5 ft. (1.5 m) in a hemispherical free field calculated per AMCA Standard 301. Values shown are for installation type A: Free inlet hemispherical sone levels. FEI calculation is based on default motor calculation in accordance with ANS/AMCA Standard 208.

PRU 402-050 BELT DRIVE

RPM	Tip Speed	Max Sones	0.00"SP		0.25"SP		0.62"SP		0.88"SP		1.25"SP		1.50"SP		1.75"SP		2.00"SP		2.25"SP		2.62"SP		2.88"SP	
			CFM		CFM		CFM		CFM		CFM		CFM		CFM		CFM		CFM		CFM		CFM	
			BHP	FEI	BHP	FEI	BHP	FEI	BHP	FEI	BHP	FEI	BHP	FEI	BHP	FEI	BHP	FEI	BHP	FEI	BHP	FEI	BHP	FEI
213	2248	4.3	5344																					
			0.16	2.91																				
277	2918	6.9	6925		4791																			
			0.33	2.03	0.41	1.91																		
340	3587	10.0	8505		6955																			
			0.6	1.46	0.73	1.59																		
404	4257	13.7	10086		8819		6325																	
			0.99	1.09	1.18	1.27	1.24	1.37																
468	4927	17.5	11667		10641		8705		7038															
			1.53	0.84	1.81	1.01	1.92	1.23	1.91	1.25														
531	5597	22	13247		12335		10792		9568		8002													
			2.23	0.66	2.65	0.82	2.76	1.06	2.83	1.15	2.8	1.17												
595	6267	26	14829		13998		12613		11597		10396		7995											
			3.11	0.53	3.33	0.72	3.62	0.94	3.76	1.04	3.85	1.1	3.72	1.1										
658	6937	31	16414		15596		14370		13552		12632		10894		9463		7112							
			4.22	0.44	4.48	0.62	4.82	0.82	4.99	0.92	5.13	0.99	5.22	1.06	5.13	1.06	4.66	0.99						
722	7607	36	17999		17326		16206		15421		14636		13291		12283		11050		9368					
			5.57	0.37	5.83	0.51	6.21	0.7	6.44	0.81	6.63	0.89	6.83	0.98	6.89	1.02	6.84	1.03	6.58	1.01				
785	8277	41	19584		18974		17877		17267		16535		15316		14584		13608		12511		10437		8120	
			7.17	0.31	7.45	0.44	7.91	0.63	8.14	0.71	8.37	0.79	8.67	0.9	8.78	0.94	8.87	0.98	8.85	1	8.54	0.99	7.77	0.93
Maximum RPM 785.45					Max HP: 10.00				Outlet Area (Sq.Ft.): 14.47				Wheel Diameter (in): 40.25				Tip Speed: 10.54 x RPM				Max Motor Frame Size: 215T			

Performance certified is for installation type A: Free inlet, Free outlet. Power rating (Bhp) does not include transmission losses. Performance ratings do not include the effects of appurtenances. The sound ratings shown are loudness values in fan sones at 5 ft. (1.5 m) in a hemispherical free field calculated per AMCA Standard 301. Values shown are for installation type A: Free inlet hemispherical sone levels. FEI calculation is based on default motor calculation in accordance with ANS/AMCA Standard 208.

PRU 402-030 BELT DRIVE

RPM	Tip Speed	Max Sones	0.00"SP		0.38"SP		0.88"SP		1.25"SP		1.75"SP		2.12"SP		2.50"SP		3.00"SP		3.38"SP		3.88"SP		4.25"SP	
			CFM		CFM		CFM		CFM		CFM		CFM		CFM		CFM		CFM		CFM		CFM	
			BHP	FEI	BHP	FEI	BHP	FEI	BHP	FEI	BHP	FEI	BHP	FEI	BHP	FEI	BHP	FEI	BHP	FEI	BHP	FEI	BHP	FEI
350	3688	9.5	5952		3861																			
			0.37	1.62	0.5	1.56																		
417	4398	13.1	7148		5364																			
			0.62	1.22	0.8	1.38																		
485	5107	16.8	8230		6853		4788																	
			1	0.91	1.23	1.14	1.38	1.2																
552	5817	21	9201		8202		6487		4968															
			1.51	0.68	1.78	0.95	2.01	1.11	2.05	1.09														
619	6526	25	10280		9283		7844		6632		4246													
			2.1	0.56	2.26	0.86	2.59	1.04	2.75	1.07	2.64	0.96												
687	7236	30	11458		10408		9105		8184		6576		4592											
			2.78	0.47	2.87	0.75	3.29	0.96	3.5	1.03	3.72	1.03	3.54	0.91										
754	7945	35	12561		11727		10648		9796		8601		7501		6158									
			3.76	0.39	4.27	0.58	4.51	0.81	4.71	0.92	4.95	1	5.09	1.01	5.09	0.96								
821	8655	40	13656		13002		12040		11296		10161		9315		8293		6647							
			4.93	0.32	5.81	0.47	5.88	0.7	6.06	0.81	6.32	0.93	6.49	0.97	6.61	0.98	6.58	0.94						
889	9364	46	14750		14201		13388		12695		11767		10936		10113		8901		7810		5747			
			6.32	0.27	7.72	0.39	7.54	0.6	7.7	0.72	7.94	0.84	8.13	0.91	8.29	0.95	8.43	0.97	8.43	0.95	7.98	0.85		
956	10074	52	15850		15322		14582		13948		12997		12258		11518		10462		9617		8138		6658	
			7.91	0.23	8.27	0.39	8.7	0.56	9	0.67	9.39	0.79	9.64	0.86	9.85	0.91	10.07	0.95	10.18	0.95	10.16	0.93	9.81	0.86
Maximum RPM 956					Max HP: 10.00				Outlet Area (Sq.Ft.): 14.47				Wheel Diameter (in): 40.25				Tip Speed: 10.54 x RPM				Max Motor Frame Size: 215T			

Performance certified is for installation type A: Free inlet, Free outlet. Power rating (Bhp) does not include transmission losses. Performance ratings do not include the effects of appurtenances. The sound ratings shown are loudness values in fan sones at 5 ft. (1.5 m) in a hemispherical free field calculated per AMCA Standard 301. Values shown are for installation type A: Free inlet hemispherical sone levels. FEI calculation is based on default motor calculation in accordance with ANS/AMCA Standard 208.

PRU 445-100 BELT DRIVE

RPM	Tip Speed	Max Sones	0.00"SP		0.12"SP		0.38"SP		0.50"SP		0.75"SP		0.88"SP		1.00"SP		1.25"SP		1.38"SP		1.62"SP		1.75"SP	
			CFM		CFM		CFM		CFM		CFM		CFM		CFM		CFM		CFM		CFM		CFM	
			BHP	FEI	BHP	FEI	BHP	FEI	BHP	FEI	BHP	FEI	BHP	FEI	BHP	FEI	BHP	FEI	BHP	FEI	BHP	FEI	BHP	FEI
236	2749	8.2	13116		10990																			
			0.66	1.96	0.72	1.99																		
277	3228	11.3	15220		13630		8112																	
			1.13	1.39	1.25	1.47	1.07	1.52																
318	3708	14.4	17318		16085		12211		8833															
			1.71	1.07	1.84	1.19	1.78	1.39	1.59	1.32														
359	4188	17.7	19408		18513		15628		13508															
			2.38	0.88	2.78	0.92	2.66	1.19	2.56	1.25														
401	4667	21	21614		20768		18352		16781		12190													
			3.27	0.72	3.42	0.84	3.57	1.05	3.54	1.12	3.22	1.16												
442	5147	25	23835		23035		21037		19705		16374		14242		11044									
			4.39	0.59	4.57	0.71	4.77	0.9	4.79	0.98	4.6	1.09	4.4	1.09	4.01	1.03								
483	5626	29	26056		25327		23580		22560		19938		18191		16297									
			5.74	0.5	5.93	0.61	6.2	0.79	6.25	0.86	6.19	0.98	6.04	1.02	5.84	1.04								
524	6106	35	28276		27644		26064		25115		22902		21638		20215		16580		14051					
			7.33	0.43	7.54	0.52	7.87	0.69	7.96	0.76	7.98	0.88	7.91	0.93	7.78	0.96	7.3	1	6.88	0.97				
565	6585	39	30497		29986		28622		27770		25894		24701		23508		20780		19075		14472			
			9.2	0.37	9.4	0.44	9.78	0.59	9.92	0.66	10.04	0.78	10.01	0.84	9.93	0.88	9.62	0.94	9.37	0.96	8.47	0.93		
606	7065	44	32718		32169		30889		30158		28512		27597		26683		24305		23025		19916		17904	
			11.36	0.32	11.61	0.4	12.03	0.53	12.19	0.6	12.37	0.71	12.39	0.76	12.37	0.8	12.17	0.87	11.99	0.9	11.46	0.93	11.04	0.93
Maximum RPM 606.4105					Max HP: 10.00				Outlet Area (Sq.Ft.): 11.43				Wheel Diameter (in): 44.5				Tip Speed: 11.65 x RPM				Max Motor Frame Size: 215T			

Performance certified is for installation type A: Free inlet, Free outlet. Power rating (Bhp) does not include transmission losses. Performance ratings do not include the effects of appurtenances. The sound ratings shown are loudness values in fan sones at 5 ft. (1.5 m) in a hemispherical free field calculated per AMCA Standard 301. Values shown are for installation type A: Free inlet hemispherical sone levels. FEI calculation is based on default motor calculation in accordance with ANS/AMCA Standard 208.

PRU 445-80 BELT DRIVE

RPM	Tip Speed	Max Sones	0.00"SP		0.25"SP		0.38"SP		0.62"SP		0.75"SP		1.00"SP		1.25"SP		1.38"SP		1.62"SP		1.75"SP		2.00"SP	
			CFM		CFM		CFM		CFM		CFM		CFM		CFM		CFM		CFM		CFM		CFM	
			BHP	FEI	BHP	FEI	BHP	FEI	BHP	FEI	BHP	FEI	BHP	FEI	BHP	FEI	BHP	FEI	BHP	FEI	BHP	FEI	BHP	FEI
236	2749	7.9	11134		6910																			
			0.54	2.01	0.59	1.90																		
281	3268	11.2	13332		10328		7586																	
			0.93	1.47	1.03	1.66	0.95	1.59																
325	3788	14.4	15531		13145		11371																	
			1.47	1.12	1.59	1.40	1.59	1.44																
370	4307	18.0	17749		15815		14513		10712															
			2.05	0.93	2.24	1.20	2.30	1.28	2.15	1.34														
414	4826	22	19969		18359		17420		14738		12860													
			2.74	0.79	3.05	1.03	3.13	1.12	3.13	1.26	3.02	1.29												
459	5345	26	22117		20780		19888		17808		16471		12757											
			3.73	0.65	4.07	0.87	4.20	0.97	4.30	1.11	4.27	1.17	3.94	1.20										
503	5864	31	24265		23124		22309		20516		19538		16930		13181		9759							
			4.92	0.54	5.29	0.73	5.47	0.83	5.66	0.98	5.68	1.04	5.55	1.13	5.08	1.14	4.46	1.04						
548	6383	36	26413		25348		24638		23219		22332		20203		17719		16122		10800					
			6.35	0.46	6.77	0.64	6.97	0.73	7.23	0.86	7.30	0.93	7.30	1.03	7.07	1.09	6.85	1.10	5.80	1.01				
592	6902	41	28561		27601		27026		25683		24916		23189		21270		20119		17242		15323			
			8.03	0.39	8.49	0.55	8.70	0.63	9.04	0.77	9.16	0.83	9.26	0.93	9.19	1.01	9.07	1.04	8.63	1.07	8.24	1.06		
637	7421	46	30709		29883		29265		28027		27408		25964		24314		23489		21220		19982		16682	
			9.98	0.34	10.45	0.48	10.73	0.56	11.14	0.69	11.28	0.74	11.48	0.84	11.51	0.92	11.47	0.95	11.22	1.01	11.01	1.03	10.30	1.03
Maximum RPM 637					Max HP: 10.00				Outlet Area (Sq.Ft.): 11.43				Wheel Diameter (in): 44.5				Tip Speed: 11.65 x RPM				Max Motor Frame Size: 215T			

Performance certified is for installation type A: Free inlet, Free outlet. Power rating (Bhp) does not include transmission losses. Performance ratings do not include the effects of appurtenances. The sound ratings shown are loudness values in fan sones at 5 ft. (1.5 m) in a hemispherical free field calculated per AMCA Standard 301. Values shown are for installation type A: Free inlet hemispherical sone levels. FEI calculation is based on default motor calculation in accordance with ANS/AMCA Standard 208.

PRU 445-050 BELT DRIVE

RPM	Tip Speed	Max Sones	0.00"SP		0.25"SP		0.50"SP		0.88"SP		1.12"SP		1.38"SP		1.62"SP		1.88"SP		2.25"SP		2.50"SP		2.75"SP	
			CFM		CFM		CFM		CFM		CFM		CFM		CFM		CFM		CFM		CFM		CFM	
			BHP	FEI	BHP	FEI	BHP	FEI	BHP	FEI	BHP	FEI	BHP	FEI	BHP	FEI	BHP	FEI	BHP	FEI	BHP	FEI	BHP	FEI
236	2749	7.1	7499		4343																			
			0.36	2	0.41	1.75																		
287	3346	10.3	9206		6866																			
			0.65	1.46	0.71	1.6																		
338	3943	13.8	10911		9139		6480																	
			1.06	1.1	1.19	1.31	1.16	1.33																
390	4541	17.7	12564		11173		9132																	
			1.61	0.85	1.78	1.07	1.82	1.19																
441	5138	22	14217		13062		11382		8128															
			2.34	0.67	2.54	0.88	2.64	1.03	2.54	1.09														
492	5735	27	15869		14815		13526		10948		8722		4620											
			3.25	0.54	3.49	0.75	3.64	0.89	3.65	1.02	3.51	1.02	2.91	0.79										
544	6333	32	17522		16616		15452		13382		11571		9630		6525									
			4.38	0.45	4.65	0.63	4.85	0.77	4.95	0.91	4.89	0.97	4.72	0.97	4.25	0.86								
595	6930	36	19175		18325		17334		15494		14078		12520		10680		8273							
			5.74	0.38	6.05	0.54	6.28	0.67	6.47	0.82	6.48	0.89	6.39	0.93	6.21	0.94	5.82	0.88						
646	7527	42	20827		20059		19290		17598		16368		15137		13599		11908		8525					
			7.35	0.32	7.69	0.47	7.94	0.57	8.24	0.73	8.31	0.81	8.29	0.86	8.19	0.9	8	0.91	7.35	0.84				
697	8124	47	22480		21816		20986		19658		18662		17334		16173		14845		12355		10529		6877	
			9.25	0.28	9.6	0.4	9.93	0.52	10.27	0.65	10.39	0.72	10.45	0.79	10.42	0.84	10.32	0.87	9.98	0.88	9.6	0.86	8.4	0.71
Maximum RPM 697.372075					Max HP: 10.00				Outlet Area (Sq.Ft.): 11.43				Wheel Diameter (in): 44.5				Tip Speed: 11.65 x RPM				Max Motor Frame Size: 215T			

Performance certified is for installation type A: Free inlet, Free outlet. Power rating (Bhp) does not include transmission losses. Performance ratings do not include the effects of appurtenances. The sound ratings shown are loudness values in fan sones at 5 ft. (1.5 m) in a hemispherical free field calculated per AMCA Standard 301. Values shown are for installation type A: Free inlet hemispherical sone levels. FEI calculation is based on default motor calculation in accordance with ANS/AMCA Standard 208.

PRU 445-30 BELT DRIVE

RPM	Tip Speed	Max Sones	0.00"SP		0.25"SP		0.50"SP		0.75"SP		1.00"SP		1.38"SP		1.62"SP		1.88"SP		2.12"SP		2.38"SP		2.62"SP	
			CFM		CFM		CFM		CFM		CFM		CFM		CFM		CFM		CFM		CFM		CFM	
			BHP	FEI	BHP	FEI	BHP	FEI	BHP	FEI	BHP	FEI	BHP	FEI	BHP	FEI	BHP	FEI	BHP	FEI	BHP	FEI	BHP	FEI
236	2749	6.3	5074		2805																			
			0.25	1.98	0.3	1.61																		
304	3543	10.2	6614		4925		2132																	
			0.48	1.42	0.53	1.55	0.51	1.09																
372	4336	14.6	7780		6644		5131		3091															
			0.73	1.13	0.86	1.3	0.93	1.32	0.89	1.11														
440	5130	19.5	9008		8024		6895		5571		3557													
			1.1	0.89	1.23	1.12	1.36	1.21	1.44	1.2	1.35	1.04												
508	5923	25	10611		9703		8752		7699		6459		3428											
			1.8	0.66	1.88	0.91	2.07	1.02	2.2	1.07	2.28	1.08	1.99	0.87										
577	6717	31	12213		11402		10565		9628		8683		6963		5520									
			2.75	0.5	2.68	0.75	2.97	0.86	3.16	0.94	3.29	0.99	3.39	0.99	3.31	0.93								
645	7510	37	13815		13080		12329		11471		10611		9317		8235		7043		5416					
			3.98	0.4	3.64	0.63	4.09	0.73	4.36	0.82	4.54	0.88	4.73	0.94	4.8	0.94	4.77	0.92	4.51	0.84				
713	8304	44	15368		14766		14165		13443		12721		11518		10796		9954		8992		7909		6586	
			5.48	0.32	5.73	0.47	5.94	0.57	6.15	0.68	6.33	0.75	6.56	0.84	6.67	0.87	6.77	0.89	6.81	0.9	6.78	0.88	6.57	0.83
781	9097	51	16836		16309		15782		15123		14464		13410		12751		11960		11301		10378		9587	
			7.21	0.27	7.48	0.39	7.71	0.49	7.96	0.59	8.17	0.66	8.46	0.76	8.61	0.8	8.75	0.84	8.85	0.86	8.94	0.87	8.96	0.87
849	9891	60	18305		17875		17302		16729		16156		15296		14579		14006		13290		12573		11857	
			9.27	0.23	9.53	0.32	9.84	0.43	10.1	0.52	10.34	0.59	10.65	0.67	10.87	0.73	11.02	0.77	11.19	0.8	11.33	0.83	11.43	0.84
Maximum RPM 849					Max HP: 10.00				Outlet Area (Sq.Ft.): 11.43				Wheel Diameter (in): 44.5				Tip Speed: 11.65 x RPM				Max Motor Frame Size: 215T			

Performance certified is for installation type A: Free inlet, Free outlet. Power rating (Bhp) does not include transmission losses. Performance ratings do not include the effects of appurtenances. The sound ratings shown are loudness values in fan sones at 5 ft. (1.5 m) in a hemispherical free field calculated per AMCA Standard 301. Values shown are for installation type A: Free inlet hemispherical sone levels. FEI calculation is based on default motor calculation in accordance with ANS/AMCA Standard 208.

PRU 490-100 BELT DRIVE

RPM	Tip Speed	Max Sones	0.00"SP		0.12"SP		0.38"SP		0.50"SP		0.62"SP		0.88"SP		1.00"SP		1.12"SP		1.25"SP		1.50"SP		1.62"SP	
			CFM		CFM		CFM		CFM		CFM		CFM		CFM		CFM		CFM		CFM		CFM	
			BHP	FEI	BHP	FEI	BHP	FEI	BHP	FEI	BHP	FEI	BHP	FEI	BHP	FEI	BHP	FEI	BHP	FEI	BHP	FEI	BHP	FEI
214	2749	8.2	15903		13325																			
			0.8	1.97	0.87	1.99																		
248	3187	10.8	18236		16220		9192																	
			1.32	1.43	1.45	1.51	1.22	1.51																
283	3626	14.2	20565		18948		14123																	
			1.96	1.11	2.07	1.24	2	1.42																
317	4065	17.2	22883		21663		17978		15239		11181													
			2.66	0.92	3.04	0.99	2.93	1.24	2.8	1.28	2.5	1.21												
351	4503	20	25287		24156		21046		18926		16240													
			3.57	0.77	3.75	0.9	3.89	1.1	3.83	1.17	3.66	1.2												
385	4942	24	27750		26819		24182		22476		20304		14565											
			4.71	0.64	4.9	0.76	5.13	0.96	5.13	1.04	5.03	1.1	4.51	1.09										
419	5381	27	30213		29368		27004		25653		23964		19742		17040									
			6.08	0.54	6.29	0.65	6.6	0.84	6.64	0.92	6.6	0.98	6.28	1.06	5.98	1.06								
454	5819	31	32675		31945		29936		28657		27196		23908		21716		19342		16237					
			7.7	0.47	7.91	0.56	8.28	0.73	8.38	0.81	8.4	0.88	8.21	0.98	7.99	1.01	7.69	1.02	7.22	0.99				
488	6258	36	35138		34353		32585		31603		30228		27478		25907		23942		21782					
			9.57	0.4	9.84	0.5	10.24	0.65	10.36	0.72	10.44	0.79	10.36	0.89	10.23	0.93	10.01	0.97	9.72	0.98				
522	6696	42	37601		36971		35289		34238		33187		30875		29404		27933		26251		22047		19315	
			11.73	0.35	11.98	0.43	12.47	0.58	12.65	0.65	12.75	0.71	12.78	0.81	12.7	0.86	12.56	0.9	12.36	0.93	11.68	0.95	11.14	0.94
Maximum RPM 522					Max HP: 15.00				Outlet Area (Sq.Ft.): 13.83				Wheel Diameter (in): 49				Tip Speed: 12.83 x RPM				Max Motor Frame Size: 254T			

Performance certified is for installation type A: Free inlet, Free outlet. Power rating (Bhp) does not include transmission losses. Performance ratings do not include the effects of appurtenances. The sound ratings shown are loudness values in fan sones at 5 ft. (1.5 m) in a hemispherical free field calculated per AMCA Standard 301. Values shown are for installation type A: Free inlet hemispherical sone levels. FEI calculation is based on default motor calculation in accordance with ANS/AMCA Standard 208.

PRU 490-80 BELT DRIVE

RPM	Tip Speed	Max Sones	0.00"SP		0.25"SP		0.38"SP		0.62"SP		0.75"SP		1.00"SP		1.25"SP		1.38"SP		1.50"SP		1.75"SP		1.88"SP	
			CFM		CFM		CFM		CFM		CFM		CFM		CFM		CFM		CFM		CFM		CFM	
			BHP	FEI	BHP	FEI	BHP	FEI	BHP	FEI	BHP	FEI	BHP	FEI	BHP	FEI	BHP	FEI	BHP	FEI	BHP	FEI	BHP	FEI
215	2758	8.1	13544		8492																			
			0.66	2.01	0.72	1.91																		
252	3233	10.8	15981		12276		8781																	
			1.09	1.50	1.21	1.69	1.11	1.59																
289	3707	14.1	18419		15471		13245																	
			1.67	1.16	1.81	1.44	1.80	1.47																
326	4182	17.4	20872		18488		16821		11657															
			2.31	0.96	2.55	1.23	2.61	1.30	2.36	1.33														
363	4657	21	23339		21185		19776		16016		13195													
			3.02	0.83	3.20	1.12	3.34	1.20	3.30	1.31	3.09	1.29												
400	5131	24	25745		24015		22805		20038		18309		12775											
			4.00	0.70	4.39	0.93	4.54	1.03	4.61	1.17	4.53	1.22	3.98	1.19										
437	5606	28	28126		26615		25670		23214		21891		18302		15657									
			5.22	0.59	5.65	0.80	5.82	0.89	6.01	1.05	6.01	1.10	5.75	1.17	5.44	1.16								
474	6081	33	30507		29073		28253		26204		25179		22311		20671		15753		11040					
			6.66	0.50	7.16	0.70	7.35	0.78	7.63	0.93	7.68	0.99	7.59	1.08	7.44	1.11	6.73	1.10	5.75	0.98				
511	6555	38	32889		31563		30901		29133		28029		25819		24494		21180		19192		11460			
			8.34	0.43	8.89	0.62	9.10	0.69	9.46	0.83	9.58	0.90	9.61	0.99	9.54	1.03	9.17	1.08	8.85	1.09	7.07	0.94		
548	7030	43	35270		34086		33375		31953		31006		29110		27926		25320		23898		20108		17502	
			10.29	0.38	10.87	0.54	11.14	0.62	11.54	0.74	11.70	0.80	11.86	0.90	11.86	0.95	11.68	1.02	11.49	1.04	10.82	1.06	10.23	1.03
Maximum RPM 548					Max HP: 15.00				Outlet Area (Sq.Ft.): 13.83				Wheel Diameter (in): 49				Tip Speed: 12.83 x RPM				Max Motor Frame Size: 254T			

Performance certified is for installation type A: Free inlet, Free outlet. Power rating (Bhp) does not include transmission losses. Performance ratings do not include the effects of appurtenances. The sound ratings shown are loudness values in fan sones at 5 ft. (1.5 m) in a hemispherical free field calculated per AMCA Standard 301. Values shown are for installation type A: Free inlet hemispherical sone levels. FEI calculation is based on default motor calculation in accordance with ANS/AMCA Standard 208.

PRU 490-050 BELT DRIVE

RPM	Tip Speed	Max Sones	0.00"SP		0.25"SP		0.50"SP		0.62"SP		0.88"SP		1.12"SP		1.38"SP		1.62"SP		1.75"SP		2.00"SP		2.25"SP	
			CFM		CFM		CFM		CFM		CFM		CFM		CFM		CFM		CFM		CFM		CFM	
			BHP	FEI	BHP	FEI	BHP	FEI	BHP	FEI	BHP	FEI	BHP	FEI	BHP	FEI	BHP	FEI	BHP	FEI	BHP	FEI	BHP	FEI
214	2749	7.1	9092		5265																			
			0.44	2.01	0.5	1.75																		
257	3299	10.1	10997		8045																			
			0.75	1.5	0.83	1.61																		
300	3848	13.4	12902		10524		6907																	
			1.19	1.14	1.28	1.39	1.24	1.33																
343	4398	17.0	14756		13012		10289		8654															
			1.78	0.9	1.97	1.12	2	1.23	1.95	1.21														
386	4948	21	16600		15129		12923		11697		8633													
			2.53	0.72	2.76	0.93	2.86	1.08	2.85	1.11	2.7	1.09												
429	5498	25	18444		17083		15312		14359		11907		8911											
			3.47	0.59	3.75	0.8	3.91	0.94	3.93	0.99	3.86	1.05	3.64	1.01										
471	6048	29	20289		19090		17592		16693		14746		12499		9652									
			4.62	0.49	4.94	0.68	5.15	0.82	5.2	0.88	5.21	0.96	5.1	1	4.82	0.96								
514	6597	35	22133		21153		19845		19028		17394		15433		13308		10693		8569					
			6	0.41	6.33	0.57	6.6	0.71	6.7	0.78	6.78	0.87	6.74	0.93	6.6	0.96	6.28	0.92	5.9	0.85				
557	7147	40	23978		23093		21853		21322		19729		18135		16365		14240		13178		10168			
			7.63	0.35	7.99	0.49	8.32	0.63	8.42	0.68	8.59	0.78	8.62	0.85	8.55	0.9	8.37	0.92	8.23	0.92	7.71	0.86		
600	7697	45	25822		25060		23916		23344		22009		20674		19149		17433		16480		14382		11904	
			9.53	0.3	9.9	0.43	10.3	0.56	10.44	0.61	10.66	0.71	10.76	0.78	10.76	0.84	10.67	0.88	10.58	0.89	10.31	0.9	9.85	0.86
Maximum RPM 600					Max HP: 10.00				Outlet Area (Sq.Ft.): 13.83				Wheel Diameter (in): 49				Tip Speed: 12.83 x RPM				Max Motor Frame Size: 215T			

Performance certified is for installation type A: Free inlet, Free outlet. Power rating (Bhp) does not include transmission losses. Performance ratings do not include the effects of appurtenances. The sound ratings shown are loudness values in fan sones at 5 ft. (1.5 m) in a hemispherical free field calculated per AMCA Standard 301. Values shown are for installation type A: Free inlet hemispherical sone levels. FEI calculation is based on default motor calculation in accordance with ANS/AMCA Standard 208.

PRU 490-30 BELT DRIVE

RPM	Tip Speed	Max Sones	0.00"SP		0.25"SP		0.50"SP		0.75"SP		1.00"SP		1.38"SP		1.62"SP		1.88"SP		2.12"SP		2.38"SP		2.62"SP	
			CFM		CFM		CFM		CFM		CFM		CFM		CFM		CFM		CFM		CFM		CFM	
			BHP	FEI	BHP	FEI	BHP	FEI	BHP	FEI	BHP	FEI	BHP	FEI	BHP	FEI	BHP	FEI	BHP	FEI	BHP	FEI	BHP	FEI
215	2758	6.4	6172		3412																			
			0.3	1.98	0.36	1.59																		
272	3494	10.1	7903		5828																			
			0.56	1.45	0.62	1.56																		
330	4229	14.2	9299		7846		5941		2769															
			0.86	1.15	1	1.33	1.07	1.32	0.94	0.98														
387	4965	18.6	10517		9308		7835		6114															
			1.19	0.95	1.36	1.16	1.5	1.24	1.57	1.2														
444	5700	24	12318		11189		9998		8586		7042													
			1.92	0.71	2.04	0.96	2.24	1.06	2.39	1.11	2.45	1.08												
502	6435	30	14119		13089		12021		10834		9631		7303		4397									
			2.89	0.55	2.89	0.8	3.19	0.91	3.39	0.98	3.53	1.02	3.58	0.98	3.11	0.81								
559	7171	35	15919		14963		13982		12998		11887		10148		8774		6897							
			4.14	0.43	3.91	0.67	4.37	0.78	4.62	0.86	4.82	0.92	5.01	0.96	5.04	0.95	4.87	0.88						
616	7906	41	17720		16900		15930		15099		14129		12603		11493		10244		8717		6634			
			5.71	0.35	5.01	0.57	5.77	0.68	6.1	0.75	6.36	0.82	6.64	0.89	6.77	0.91	6.83	0.91	6.75	0.89	6.32	0.8		
674	8642	48	19392		18784		18025		17115		16356		14989		14079		13168		12105		11042		9676	
			7.49	0.29	7.77	0.41	8.07	0.53	8.36	0.64	8.57	0.71	8.88	0.8	9.05	0.84	9.18	0.87	9.28	0.88	9.31	0.88	9.23	0.86
731	9377	55	21042		20548		19724		19065		18242		17089		16265		15441		14453		13629		12641	
			9.57	0.25	9.85	0.35	10.24	0.47	10.5	0.55	10.8	0.64	11.14	0.72	11.35	0.77	11.53	0.81	11.71	0.84	11.81	0.85	11.89	0.86
Maximum RPM 731					Max HP: 15.00				Outlet Area (Sq.Ft.): 13.83				Wheel Diameter (in): 49				Tip Speed: 12.83 x RPM				Max Motor Frame Size: 254T			

Performance certified is for installation type A: Free inlet, Free outlet. Power rating (Bhp) does not include transmission losses. Performance ratings do not include the effects of appurtenances. The sound ratings shown are loudness values in fan sones at 5 ft. (1.5 m) in a hemispherical free field calculated per AMCA Standard 301. Values shown are for installation type A: Free inlet hemispherical sone levels. FEI calculation is based on default motor calculation in accordance with ANS/AMCA Standard 208.

PRU 542-100 BELT DRIVE

RPM	Tip Speed	Max Sones	0.00"SP		0.12"SP		0.38"SP		0.50"SP		0.62"SP		0.88"SP		1.00"SP		1.12"SP		1.25"SP		1.50"SP		1.62"SP	
			CFM		CFM		CFM		CFM		CFM		CFM		CFM		CFM		CFM		CFM		CFM	
			BHP	FEI	BHP	FEI	BHP	FEI	BHP	FEI	BHP	FEI	BHP	FEI	BHP	FEI	BHP	FEI	BHP	FEI	BHP	FEI	BHP	FEI
194	2755	8.4	19535		16336																			
			0.99	1.96	1.08	1.99																		
227	3219	11.1	22560		20200		11893																	
			1.67	1.4	1.84	1.48	1.57	1.52																
259	3683	14.4	25578		23602		17879		12607															
			2.5	1.08	2.67	1.21	2.59	1.4	2.28	1.31														
292	4147	18.2	28583		27246		22830		19715		15262													
			3.44	0.89	4	0.94	3.84	1.21	3.68	1.26	3.37	1.22												
325	4611	22	31738		30496		26770		24287		21271													
			4.69	0.73	4.91	0.85	5.12	1.06	5.06	1.14	4.89	1.17												
357	5075	25	34931		33760		30636		28683		26340		20091											
			6.26	0.61	6.51	0.72	6.81	0.92	6.82	1	6.73	1.06	6.19	1.09										
390	5539	29	38125		37059		34502		32797		30879		26190		23207		19158							
			8.14	0.51	8.41	0.62	8.79	0.79	8.87	0.87	8.86	0.94	8.53	1.03	8.21	1.04	7.66	1.01						
423	6003	34	41318		40394		38085		36699		35082		31156		28846		26305		23072					
			10.36	0.44	10.65	0.53	11.11	0.69	11.25	0.77	11.3	0.83	11.13	0.94	10.91	0.98	10.61	1	10.14	0.99				
455	6467	39	44511		43765		41526		40281		38789		35803		33812		31822		29334		23362			
			12.95	0.38	13.23	0.45	13.81	0.62	13.99	0.68	14.1	0.75	14.08	0.85	13.94	0.9	13.73	0.93	13.41	0.96	12.4	0.95		
488	6931	44	47705		46905		45038		43971		42638		39971		38371		36505		34638		30371		27705	
			15.94	0.33	16.29	0.4	16.88	0.54	17.1	0.6	17.28	0.67	17.39	0.77	17.34	0.82	17.19	0.86	16.98	0.89	16.32	0.93	15.83	0.94
Maximum RPM 488					Max HP: 15.00				Outlet Area (Sq.Ft.): 17				Wheel Diameter (in): 54.25				Tip Speed: 14.2 x RPM				Max Motor Frame Size: 254T			

Performance certified is for installation type A: Free inlet, Free outlet. Power rating (Bhp) does not include transmission losses. Performance ratings do not include the effects of appurtenances. The sound ratings shown are loudness values in fan sones at 5 ft. (1.5 m) in a hemispherical free field calculated per AMCA Standard 301. Values shown are for installation type A: Free inlet hemispherical sone levels. FEI calculation is based on default motor calculation in accordance with ANS/AMCA Standard 208.

PRU 542-80 BELT DRIVE

RPM	Tip Speed	Max Sones	0.00"SP		0.12"SP		0.38"SP		0.50"SP		0.75"SP		0.88"SP		1.00"SP		1.25"SP		1.38"SP		1.62"SP		1.75"SP	
			CFM		CFM		CFM		CFM		CFM		CFM		CFM		CFM		CFM		CFM		CFM	
			BHP	FEI	BHP	FEI	BHP	FEI	BHP	FEI	BHP	FEI	BHP	FEI	BHP	FEI	BHP	FEI	BHP	FEI	BHP	FEI	BHP	FEI
194	2755	8.1	16585		14242																			
			0.81	2.02	0.91	2.05																		
227	3219	10.8	19505		17616		10590																	
			1.32	1.52	1.40	1.68	1.34	1.58																
259	3683	14.0	22425		20802		15978		11478															
			2.01	1.17	2.01	1.40	2.16	1.48	1.94	1.40														
292	4147	17.4	25362		23988		20283		17743															
			2.78	0.97	2.91	1.14	3.13	1.31	3.06	1.35														
325	4611	21	28318		27043		24008		21919		15646													
			3.61	0.84	3.52	1.05	4.00	1.21	4.04	1.27	3.66	1.29												
357	5075	24	31211		30163		27647		25970		21777		18842		14439									
			4.74	0.71	5.01	0.84	5.38	1.04	5.47	1.12	5.35	1.23	5.10	1.24	4.58	1.17								
390	5539	28	34065		33149		30861		29488		26285		24225		21480		11869							
			6.17	0.60	6.46	0.71	6.92	0.91	7.05	0.99	7.10	1.11	6.98	1.16	6.73	1.18	5.23	1.00						
423	6003	33	36918		36174		34190		32950		30222		28486		26503		21791		18071					
			7.85	0.51	8.13	0.61	8.67	0.79	8.88	0.87	9.06	1.00	9.03	1.06	8.91	1.10	8.37	1.13	7.76	1.09				
455	6467	37	39771		38970		37367		36298		33894		32558		30955		27215		25078		18399			
			9.82	0.44	10.17	0.54	10.71	0.69	10.96	0.77	11.27	0.90	11.32	0.95	11.30	1.00	11.00	1.08	10.71	1.09	9.47	1.04		
488	6931	42	42624		42052		40334		39475		37184		36039		34894		31744		30027		25732		23155	
			12.08	0.39	12.38	0.46	13.09	0.62	13.35	0.69	13.79	0.82	13.89	0.87	13.94	0.92	13.82	1.00	13.65	1.03	12.99	1.06	12.47	1.05
Maximum RPM 488					Max HP: 15.00				Outlet Area (Sq.Ft.): 17				Wheel Diameter (in): 54.25				Tip Speed: 14.2 x RPM				Max Motor Frame Size: 254T			

Performance certified is for installation type A: Free inlet, Free outlet. Power rating (Bhp) does not include transmission losses. Performance ratings do not include the effects of appurtenances. The sound ratings shown are loudness values in fan sones at 5 ft. (1.5 m) in a hemispherical free field calculated per AMCA Standard 301. Values shown are for installation type A: Free inlet hemispherical sone levels. FEI calculation is based on default motor calculation in accordance with ANS/AMCA Standard 208.

PRU 542-050 BELT DRIVE

RPM	Tip Speed	Max Sones	0.00"SP		0.25"SP		0.50"SP		0.62"SP		0.88"SP		1.12"SP		1.38"SP		1.62"SP		1.75"SP		2.00"SP		2.25"SP	
			CFM		CFM		CFM		CFM		CFM		CFM		CFM		CFM		CFM		CFM		CFM	
			BHP	FEI	BHP	FEI	BHP	FEI	BHP	FEI	BHP	FEI	BHP	FEI	BHP	FEI	BHP	FEI	BHP	FEI	BHP	FEI	BHP	FEI
194	2751	7.3	11156		6445																			
			0.54	2.01	0.61	1.74																		
232	3290	10.0	13442		9834																			
			0.92	1.5	1.01	1.62																		
270	3828	13.6	15727		12830		8306																	
			1.44	1.15	1.55	1.4	1.49	1.32																
307	4366	17.0	17954		15700		12386		10397															
			2.13	0.9	2.37	1.13	2.39	1.23	2.33	1.21														
345	4904	21	20167		18231		15700		14062		10190													
			3.02	0.73	3.31	0.95	3.42	1.09	3.4	1.12	3.2	1.08												
383	5442	25	22380		20728		18579		17257		14283		10317											
			4.13	0.59	4.46	0.8	4.64	0.95	4.67	1	4.59	1.05	4.27	0.99										
421	5980	29	24593		23140		21324		20235		17693		14787		10974									
			5.48	0.5	5.85	0.69	6.1	0.83	6.17	0.89	6.18	0.97	6.02	1	5.61	0.93								
459	6519	34	26806		25619		23837		23045		20868		18493		15722		12159		9190					
			7.1	0.42	7.48	0.58	7.83	0.73	7.92	0.78	8.02	0.88	7.97	0.94	7.76	0.96	7.3	0.91	6.7	0.8				
497	7057	40	29019		27948		26448		25591		23877		21734		19377		16806		15306		11449			
			9	0.36	9.42	0.5	9.82	0.64	9.97	0.7	10.14	0.79	10.17	0.86	10.06	0.91	9.82	0.93	9.63	0.92	8.9	0.83		
535	7595	45	31232		30310		28926		28234		26620		24775		22700		20624		19471		16934		13475	
			11.23	0.31	11.66	0.43	12.13	0.56	12.29	0.62	12.56	0.71	12.68	0.79	12.66	0.85	12.53	0.89	12.41	0.9	12.08	0.9	11.39	0.84
Maximum RPM 534.75					Max HP: 10.00				Outlet Area (Sq.Ft.): 17				Wheel Diameter (in): 54.25				Tip Speed: 14.2 x RPM				Max Motor Frame Size: 215T			

Performance certified is for installation type A: Free inlet, Free outlet. Power rating (Bhp) does not include transmission losses. Performance ratings do not include the effects of appurtenances. The sound ratings shown are loudness values in fan sones at 5 ft. (1.5 m) in a hemispherical free field calculated per AMCA Standard 301. Values shown are for installation type A: Free inlet hemispherical sone levels. FEI calculation is based on default motor calculation in accordance with ANS/AMCA Standard 208.

PRU 542-30 BELT DRIVE

RPM	Tip Speed	Max Sones	0.00"SP		0.25"SP		0.50"SP		0.75"SP		1.00"SP		1.38"SP		1.62"SP		1.88"SP		2.12"SP		2.38"SP		2.62"SP	
			CFM		CFM		CFM		CFM		CFM		CFM		CFM		CFM		CFM		CFM		CFM	
			BHP	FEI	BHP	FEI	BHP	FEI	BHP	FEI	BHP	FEI	BHP	FEI	BHP	FEI	BHP	FEI	BHP	FEI	BHP	FEI	BHP	FEI
194	2755	6.5	7557		4178																			
			0.37	1.99	0.44	1.59																		
245	3476	9.9	9638		7034																			
			0.68	1.46	0.76	1.56																		
296	4198	14.2	11350		9483		7145		2826															
			1.04	1.15	1.21	1.33	1.3	1.31	1.06	0.89														
346	4919	18.6	12755		11203		9414		7322															
			1.42	0.97	1.63	1.18	1.79	1.25	1.87	1.2														
397	5640	23	14919		13557		12006		10294		8303													
			2.27	0.72	2.42	0.96	2.67	1.07	2.84	1.11	2.91	1.08												
448	6361	29	17083		15843		14553		12987		11531		8577											
			3.41	0.56	3.41	0.8	3.77	0.91	4.02	0.99	4.18	1.02	4.22	0.97										
499	7082	36	19247		18096		16912		15576		14233		11979		10318		7743							
			4.87	0.44	4.61	0.68	5.14	0.79	5.47	0.87	5.7	0.93	5.92	0.96	5.94	0.94	5.63	0.85						
549	7804	42	21412		20425		19255		18086		16915		14906		13565		12055		10209					
			6.71	0.36	5.89	0.58	6.79	0.68	7.22	0.77	7.51	0.83	7.86	0.9	7.99	0.92	8.04	0.91	7.91	0.88				
600	8525	49	23447		22713		21795		20694		19593		17941		16839		15555		14270		12985		11333	
			8.82	0.3	9.14	0.42	9.49	0.54	9.84	0.64	10.13	0.72	10.49	0.81	10.68	0.85	10.84	0.87	10.94	0.88	10.95	0.88	10.81	0.85
651	9246	56	25431		24635		23838		23042		22047		20454		19458		18463		17269		16074		14880	
			11.25	0.26	11.67	0.38	12.03	0.48	12.34	0.56	12.68	0.64	13.14	0.74	13.38	0.78	13.59	0.81	13.78	0.84	13.92	0.86	13.98	0.86
Maximum RPM 651					Max HP: 15.00				Outlet Area (Sq.Ft.): 17				Wheel Diameter (in): 54.25				Tip Speed: 14.2 x RPM				Max Motor Frame Size: 254T			

Performance certified is for installation type A: Free inlet, Free outlet. Power rating (Bhp) does not include transmission losses. Performance ratings do not include the effects of appurtenances. The sound ratings shown are loudness values in fan sones at 5 ft. (1.5 m) in a hemispherical free field calculated per AMCA Standard 301. Values shown are for installation type A: Free inlet hemispherical sone levels. FEI calculation is based on default motor calculation in accordance with ANS/AMCA Standard 208.

PRD 060-100 BELT DRIVE

RPM	Tip Speed	Max Sones	0.00"SP		0.12"SP		0.25"SP		0.38"SP		0.50"SP		0.62"SP		0.75"SP		0.88"SP							
			CFM		CFM		CFM		CFM		CFM		CFM		CFM		CFM		CFM		CFM		CFM	
			BHP	FEI	BHP	FEI	BHP	FEI	BHP	FEI	BHP	FEI	BHP	FEI	BHP	FEI	BHP	FEI	BHP	FEI	BHP	FEI	BHP	FEI
700	1833	1.7	102																					
			0.01	0.4																				
861	2255	2.9	130		79																			
			0.01	0.84	0.01	0.79																		
1023	2677	4.3	157		117		62																	
			0.02	1.21	0.02	1.31	0.02	1.34																
1184	3100	5.7	185		152		113																	
			0.03	1.15	0.03	1.3	0.03	1.38																
1345	3522	7.0	211		184		155		119		70													
			0.05	1.02	0.05	1.13	0.05	1.24	0.05	1.31	0.04	1.38												
1507	3944	8.4	237		214		188		159		126		85											
			0.06	0.89	0.07	0.96	0.07	1.08	0.06	1.17	0.06	1.24	0.06	1.29										
1668	4367	10.0	262		242		219		196		171		138		103		59							
			0.08	0.76	0.09	0.81	0.09	0.93	0.09	1.02	0.09	1.09	0.09	1.15	0.08	1.2	0.07	1.27						
1829	4789	11.8	288		269		248		225		202		176		146		109							
			0.11	0.65	0.11	0.73	0.11	0.82	0.11	0.91	0.11	0.98	0.11	1.03	0.11	1.08	0.1	1.12						
1991	5212	14.0	313		295		275		257		234		214		189		161							
			0.14	0.56	0.14	0.63	0.14	0.72	0.14	0.79	0.14	0.86	0.14	0.91	0.14	0.96	0.14	0.99						
2152	5634	16.3	338		322		305		286		267		248		229		204							
			0.18	0.48	0.18	0.55	0.18	0.61	0.18	0.69	0.18	0.75	0.18	0.8	0.18	0.85	0.18	0.89						
Maximum RPM 2152					Max HP: 0.25				Outlet Area (Sq.Ft.): 1.32				Wheel Diameter (in): 10				Tip Speed: 2.62 x RPM				Max Motor Frame Size: 48			

Performance certified is for installation type A: Free inlet, Free outlet. Power rating (Bhp) does not include transmission losses. Performance ratings do not include the effects of appurtenances. The sound ratings shown are loudness values in fan sones at 5 ft. (1.5 m) in a hemispherical free field calculated per AMCA Standard 301. Values shown are for installation type A: Free inlet hemispherical sone levels. FEI calculation is based on default motor calculation in accordance with ANS/AMCA Standard 208.

PRD 070-100 BELT DRIVE

RPM	Tip Speed	Max Sones	0.00"SP		0.12"SP		0.25"SP		0.38"SP		0.50"SP		0.62"SP		0.75"SP		0.88"SP							
			CFM		CFM		CFM		CFM		CFM		CFM		CFM		CFM		CFM		CFM		CFM	
			BHP	FEI	BHP	FEI	BHP	FEI	BHP	FEI	BHP	FEI	BHP	FEI	BHP	FEI	BHP	FEI	BHP	FEI	BHP	FEI	BHP	FEI
700	1833	2.0	184																					
			0.01	0.44																				
861	2255	3.3	240		162																			
			0.01	0.68	0.01	0.99																		
1023	2677	4.9	297		234		127																	
			0.02	1.41	0.02	1.54	0.02	1.5																
1184	3100	6.4	353		297		228		88															
			0.03	1.38	0.03	1.55	0.03	1.61	0.03	1.55														
1345	3522	7.9	405		359		304		235		123													
			0.05	1.22	0.05	1.38	0.05	1.48	0.05	1.54	0.04	1.53												
1507	3944	9.7	456		413		366		311		244		126											
			0.07	1.07	0.06	1.24	0.07	1.33	0.07	1.41	0.07	1.45	0.06	1.46										
1668	4367	11.6	506		466		425		376		327		257		151									
			0.09	0.92	0.08	1.11	0.09	1.19	0.09	1.28	0.09	1.33	0.09	1.36	0.08	1.37								
1829	4789	14.1	556		524		488		448		403		358		300		228							
			0.12	0.79	0.12	0.9	0.12	1	0.12	1.1	0.12	1.17	0.12	1.22	0.12	1.25	0.12	1.26						
1991	5212	16.7	605		576		541		507		468		429		385		331							
			0.15	0.68	0.16	0.78	0.16	0.88	0.16	0.97	0.16	1.05	0.16	1.1	0.16	1.14	0.16	1.17						
2152	5634	19.2	654		627		596		564		532		495		458		416							
			0.19	0.59	0.2	0.68	0.2	0.78	0.2	0.86	0.2	0.93	0.2	0.99	0.2	1.04	0.2	1.08						
Maximum RPM 2152					Max HP: 0.25				Outlet Area (Sq.Ft.): 1.32				Wheel Diameter (in): 10				Tip Speed: 2.62 x RPM				Max Motor Frame Size: 48			

Performance certified is for installation type A: Free inlet, Free outlet. Power rating (Bhp) does not include transmission losses. Performance ratings do not include the effects of appurtenances. The sound ratings shown are loudness values in fan sones at 5 ft. (1.5 m) in a hemispherical free field calculated per AMCA Standard 301. Values shown are for installation type A: Free inlet hemispherical sone levels. FEI calculation is based on default motor calculation in accordance with ANS/AMCA Standard 208.

PRD 080-100 BELT DRIVE

RPM	Tip Speed	Max Sones	0.00"SP		0.12"SP		0.25"SP		0.38"SP		0.50"SP		0.62"SP		0.75"SP		0.88"SP							
			CFM		CFM		CFM		CFM		CFM		CFM		CFM		CFM		CFM		CFM		CFM	
			BHP	FEI	BHP	FEI	BHP	FEI	BHP	FEI	BHP	FEI	BHP	FEI	BHP	FEI	BHP	FEI	BHP	FEI	BHP	FEI	BHP	FEI
700	1833	2.4	184																					
			0.01	0.44																				
861	2255	3.9	240		162																			
			0.01	0.68	0.01	0.99																		
1023	2677	5.9	297		234		127																	
			0.02	1.41	0.02	1.54	0.02	1.5																
1184	3100	7.5	353		297		228		88															
			0.03	1.38	0.03	1.55	0.03	1.61	0.03	1.55														
1345	3522	9.3	405		359		304		235		123													
			0.05	1.22	0.05	1.38	0.05	1.48	0.05	1.54	0.04	1.53												
1507	3944	11.1	456		413		366		311		244		126											
			0.07	1.07	0.06	1.24	0.07	1.33	0.07	1.41	0.07	1.45	0.06	1.46										
1668	4367	13.2	506		466		425		376		327		257		151									
			0.09	0.92	0.08	1.11	0.09	1.19	0.09	1.28	0.09	1.33	0.09	1.36	0.08	1.37								
1829	4789	15.5	556		524		488		448		403		358		300		228							
			0.12	0.79	0.12	0.9	0.12	1	0.12	1.1	0.12	1.17	0.12	1.22	0.12	1.25	0.12	1.26						
1991	5212	18.0	605		576		541		507		468		429		385		331							
			0.15	0.68	0.16	0.78	0.16	0.88	0.16	0.97	0.16	1.05	0.16	1.1	0.16	1.14	0.16	1.17						
2152	5634	21	654		627		596		564		532		495		458		416							
			0.19	0.59	0.2	0.68	0.2	0.78	0.2	0.86	0.2	0.93	0.2	0.99	0.2	1.04	0.2	1.08						
Maximum RPM 2152					Max HP: 0.25				Outlet Area (Sq.Ft.): 1.32				Wheel Diameter (in): 10				Tip Speed: 2.62 x RPM				Max Motor Frame Size: 48			

Performance certified is for installation type A: Free inlet, Free outlet. Power rating (Bhp) does not include transmission losses. Performance ratings do not include the effects of appurtenances. The sound ratings shown are loudness values in fan sones at 5 ft. (1.5 m) in a hemispherical free field calculated per AMCA Standard 301. Values shown are for installation type A: Free inlet hemispherical sone levels. FEI calculation is based on default motor calculation in accordance with ANS/AMCA Standard 208.

PRD 100-100 BELT DRIVE

RPM	Tip Speed	Max Sones	0.00"SP		0.12"SP		0.25"SP		0.38"SP		0.50"SP		0.62"SP		0.75"SP									
			CFM		CFM		CFM		CFM		CFM		CFM		CFM		CFM		CFM		CFM		CFM	
			BHP	FEI	BHP	FEI	BHP	FEI	BHP	FEI	BHP	FEI	BHP	FEI	BHP	FEI	BHP	FEI	BHP	FEI	BHP	FEI	BHP	FEI
700	1833	2.5	364																					
			0.01	0.53																				
848	2220	3.9	452		326																			
			0.01	1.21	0.01	1.52																		
996	2608	6.2	541		436		260																	
			0.02	1.78	0.02	1.93	0.02	1.83																
1144	2995	7.6	629		537		433																	
			0.03	1.74	0.04	1.9	0.04	1.94																
1292	3382	9.3	717		636		555		445															
			0.05	1.54	0.05	1.69	0.06	1.78	0.06	1.81														
1440	3770	11.1	804		731		660		578		460													
			0.07	1.32	0.07	1.5	0.08	1.59	0.08	1.65	0.08	1.67												
1588	4157	12.9	891		819		757		689		604		484											
			0.1	1.13	0.1	1.34	0.11	1.42	0.11	1.49	0.11	1.54	0.11	1.55										
1736	4545	15.0	978		916		860		797		735		654		555									
			0.14	0.97	0.14	1.1	0.15	1.21	0.15	1.31	0.15	1.37	0.15	1.43	0.15	1.45								
1884	4932	17.1	1061		1007		953		899		838		778		703									
			0.17	0.84	0.18	0.96	0.18	1.07	0.19	1.17	0.19	1.25	0.2	1.31	0.2	1.35								
2032	5320	18.6	1145		1094		1043		992		941		890		824									
			0.22	0.74	0.22	0.85	0.23	0.96	0.24	1.05	0.24	1.13	0.24	1.19	0.25	1.25								
Maximum RPM 2032					Max HP: 0.25				Outlet Area (Sq.Ft.): 1.32				Wheel Diameter (in): 10				Tip Speed: 2.62 x RPM				Max Motor Frame Size: 48			

Performance certified is for installation type A: Free inlet, Free outlet. Power rating (Bhp) does not include transmission losses. Performance ratings do not include the effects of appurtenances. The sound ratings shown are loudness values in fan sones at 5 ft. (1.5 m) in a hemispherical free field calculated per AMCA Standard 301. Values shown are for installation type A: Free inlet hemispherical sone levels. FEI calculation is based on default motor calculation in accordance with ANS/AMCA Standard 208.

PRD 122-100 BELT DRIVE

RPM	Tip Speed	Max Sones	0.00"SP		0.12"SP		0.25"SP		0.38"SP		0.50"SP		0.62"SP		0.75"SP									
			CFM		CFM		CFM		CFM		CFM		CFM		CFM		CFM		CFM		CFM		CFM	
			BHP	FEI	BHP	FEI	BHP	FEI	BHP	FEI	BHP	FEI	BHP	FEI	BHP	FEI	BHP	FEI	BHP	FEI	BHP	FEI	BHP	FEI
700	1833	4.1	364																					
			0.01	0.53																				
827	2166	5.7	440		307																			
			0.01	1.01	0.01	1.39																		
954	2499	7.6	516		406																			
			0.02	1.72	0.02	1.88																		
1082	2832	10.3	592		495		374																	
			0.03	1.79	0.03	1.94	0.03	1.95																
1209	3165	12.2	668		586		494		343															
			0.04	1.67	0.04	1.8	0.05	1.88	0.05	1.85														
1336	3498	14.3	743		668		588		489															
			0.06	1.47	0.06	1.63	0.06	1.72	0.07	1.77														
1463	3831	16.5	818		743		676		593		488													
			0.08	1.29	0.08	1.48	0.08	1.56	0.09	1.63	0.09	1.65												
1591	4164	18.9	893		820		758		690		605		491											
			0.1	1.12	0.1	1.33	0.11	1.41	0.11	1.49	0.11	1.54	0.11	1.55										
1718	4497	21	968		899		838		776		708		628		499									
			0.13	0.98	0.12	1.2	0.13	1.28	0.14	1.36	0.14	1.42	0.14	1.46	0.14	1.47								
1845	4830	24	1039		980		927		874		814		748		669									
			0.16	0.87	0.17	1.01	0.17	1.11	0.18	1.2	0.18	1.28	0.19	1.34	0.18	1.38								
Maximum RPM 1845					Max HP: 0.50				Outlet Area (Sq.Ft.): 1.32				Wheel Diameter (in): 10				Tip Speed: 2.62 x RPM				Max Motor Frame Size: 56			

Performance certified is for installation type A: Free inlet, Free outlet. Power rating (Bhp) does not include transmission losses. Performance ratings do not include the effects of appurtenances. The sound ratings shown are loudness values in fan sones at 5 ft. (1.5 m) in a hemispherical free field calculated per AMCA Standard 301. Values shown are for installation type A: Free inlet hemispherical sone levels. FEI calculation is based on default motor calculation in accordance with ANS/AMCA Standard 208.

PRD 135-100 BELT DRIVE

RPM	Tip Speed	Max Sones	0.00"SP		0.12"SP		0.38"SP		0.50"SP		0.62"SP		0.88"SP		1.00"SP		1.12"SP		1.25"SP		1.50"SP		1.62"SP	
			CFM		CFM		CFM		CFM		CFM		CFM		CFM		CFM		CFM		CFM		CFM	
			BHP	FEI	BHP	FEI	BHP	FEI	BHP	FEI	BHP	FEI	BHP	FEI	BHP	FEI	BHP	FEI	BHP	FEI	BHP	FEI	BHP	FEI
547	1933	3.2	770		498																			
			0.02	2.03	0.02	2.05																		
691	2443	5.0	988		792																			
			0.04	2.19	0.04	2.22																		
835	2953	7.1	1205		1046																			
			0.06	1.83	0.07	1.96																		
980	3462	9.6	1422		1287		963		563															
			0.1	1.47	0.11	1.67	0.12	1.76	0.1	1.63														
1124	3972	12.9	1640		1524		1263		1096		824													
			0.16	1.18	0.15	1.42	0.18	1.56	0.18	1.59	0.17	1.55												
1268	4482	15.4	1857		1769		1552		1434		1282													
			0.23	0.97	0.24	1.13	0.26	1.34	0.26	1.41	0.26	1.46												
1412	4992	18.1	2076		1987		1812		1706		1601		1299		1063									
			0.32	0.81	0.3	1.01	0.34	1.18	0.35	1.26	0.35	1.32	0.35	1.38	0.34	1.35								
1557	5501	21	2294		2224		2061		1973		1885		1651		1520		1345		1053					
			0.42	0.68	0.37	0.9	0.44	1.05	0.45	1.13	0.46	1.19	0.47	1.29	0.47	1.31	0.46	1.31	0.43	1.27				
1701	6011	24	2512		2432		2304		2224		2143		1967		1854		1742		1598		1101			
			0.55	0.58	0.47	0.82	0.55	0.93	0.57	1.01	0.59	1.07	0.61	1.18	0.61	1.22	0.62	1.25	0.61	1.26	0.54	1.2		
1845	6521	27	2726		2674		2552		2482		2412		2256		2186		2082		1994		1751		1594	
			0.7	0.5	0.72	0.59	0.75	0.77	0.76	0.85	0.77	0.92	0.8	1.05	0.8	1.09	0.81	1.14	0.81	1.17	0.8	1.21	0.79	1.21
Maximum RPM 1845					Max HP: 1.00				Outlet Area (Sq.Ft.): 1.99				Wheel Diameter (in): 13.5				Tip Speed: 3.53 x RPM				Max Motor Frame Size: 56			

Performance certified is for installation type A: Free inlet, Free outlet. Power rating (Bhp) does not include transmission losses. Performance ratings do not include the effects of appurtenances. The sound ratings shown are loudness values in fan sones at 5 ft. (1.5 m) in a hemispherical free field calculated per AMCA Standard 301. Values shown are for installation type A: Free inlet hemispherical sone levels. FEI calculation is based on default motor calculation in accordance with ANS/AMCA Standard 208.

PRD 135-080 BELT DRIVE

RPM	Tip Speed	Max Sones	0.00"SP		0.12"SP		0.38"SP		0.50"SP		0.75"SP		0.88"SP		1.00"SP		1.25"SP		1.38"SP		1.62"SP		1.75"SP	
			CFM		CFM		CFM		CFM		CFM		CFM		CFM		CFM		CFM		CFM		CFM	
			BHP	FEI	BHP	FEI	BHP	FEI	BHP	FEI	BHP	FEI	BHP	FEI	BHP	FEI	BHP	FEI	BHP	FEI	BHP	FEI	BHP	FEI
547	1933	3.1	696		441																			
			0.02	1.88	0.02	1.91																		
691	2443	4.8	883		701																			
			0.03	2.2	0.03	2.32																		
835	2953	6.9	1072		935		419																	
			0.05	1.94	0.05	2.15	0.05	1.98																
980	3462	9.3	1264		1147		856		545															
			0.08	1.57	0.09	1.78	0.1	1.84	0.08	1.79														
1124	3972	12.4	1455		1346		1122		974															
			0.13	1.27	0.13	1.48	0.15	1.63	0.15	1.67														
1268	4482	14.9	1649		1560		1372		1271		968													
			0.19	1.03	0.21	1.15	0.22	1.36	0.23	1.45	0.22	1.53												
1412	4992	17.6	1853		1769		1600		1508		1299		1158		932									
			0.28	0.84	0.27	0.99	0.3	1.18	0.31	1.27	0.32	1.38	0.31	1.41	0.29	1.39								
1557	5501	20	2057		1971		1818		1741		1561		1457		1340		905							
			0.38	0.69	0.36	0.88	0.4	1.03	0.41	1.11	0.42	1.24	0.43	1.28	0.42	1.31	0.38	1.27						
1701	6011	23	2261		2176		2034		1963		1806		1720		1634		1390		1232					
			0.51	0.58	0.45	0.78	0.51	0.91	0.53	0.98	0.55	1.11	0.55	1.16	0.56	1.2	0.55	1.25	0.54	1.24				
1845	6521	27	2465		2383		2243		2180		2039		1961		1883		1710		1600		1302		1019	
			0.66	0.49	0.55	0.69	0.64	0.81	0.66	0.87	0.69	1	0.7	1.05	0.71	1.09	0.71	1.16	0.71	1.18	0.68	1.18	0.62	1.14
Maximum RPM 1845					Max HP: 1.00				Outlet Area (Sq.Ft.): 1.99				Wheel Diameter (in): 13.5				Tip Speed: 3.53 x RPM				Max Motor Frame Size: 56			

Performance certified is for installation type A: Free inlet, Free outlet. Power rating (Bhp) does not include transmission losses. Performance ratings do not include the effects of appurtenances. The sound ratings shown are loudness values in fan sones at 5 ft. (1.5 m) in a hemispherical free field calculated per AMCA Standard 301. Values shown are for installation type A: Free inlet hemispherical sone levels. FEI calculation is based on default motor calculation in accordance with ANS/AMCA Standard 208.

PRD 150-100 BELT DRIVE

RPM	Tip Speed	Max Sones	0.00"SP		0.12"SP		0.38"SP		0.50"SP		0.62"SP		0.88"SP		1.00"SP		1.12"SP		1.25"SP		1.50"SP		1.62"SP	
			CFM		CFM		CFM		CFM		CFM		CFM		CFM		CFM		CFM		CFM		CFM	
			BHP	FEI	BHP	FEI	BHP	FEI	BHP	FEI	BHP	FEI	BHP	FEI	BHP	FEI	BHP	FEI	BHP	FEI	BHP	FEI	BHP	FEI
547	1933	4.1	770		498																			
			0.02	2.03	0.02	2.05																		
691	2443	6.2	988		792																			
			0.04	2.19	0.04	2.22																		
835	2953	8.6	1205		1046																			
			0.06	1.83	0.07	1.96																		
980	3462	11.7	1422		1287		963		563															
			0.1	1.47	0.11	1.67	0.12	1.76	0.1	1.63														
1124	3972	15.6	1640		1524		1263		1096		824													
			0.16	1.18	0.15	1.42	0.18	1.56	0.18	1.59	0.17	1.55												
1268	4482	18.6	1857		1769		1552		1434		1282													
			0.23	0.97	0.24	1.13	0.26	1.34	0.26	1.41	0.26	1.46												
1412	4992	22	2076		1987		1812		1706		1601		1299		1063									
			0.32	0.81	0.3	1.01	0.34	1.18	0.35	1.26	0.35	1.32	0.35	1.38	0.34	1.35								
1557	5501	26	2294		2224		2061		1973		1885		1651		1520		1345		1053					
			0.42	0.68	0.37	0.9	0.44	1.05	0.45	1.13	0.46	1.19	0.47	1.29	0.47	1.31	0.46	1.31	0.43	1.27				
1701	6011	29	2512		2432		2304		2224		2143		1967		1854		1742		1598		1101			
			0.55	0.58	0.47	0.82	0.55	0.93	0.57	1.01	0.59	1.07	0.61	1.18	0.61	1.22	0.62	1.25	0.61	1.26	0.54	1.2		
1845	6521	34	2726		2674		2552		2482		2412		2256		2186		2082		1994		1751		1594	
			0.7	0.5	0.72	0.59	0.75	0.77	0.76	0.85	0.77	0.92	0.8	1.05	0.8	1.09	0.81	1.14	0.81	1.17	0.8	1.21	0.79	1.21
Maximum RPM 1845					Max HP: 1.50				Outlet Area (Sq.Ft.): 1.99				Wheel Diameter (in): 13.5				Tip Speed: 3.53 x RPM				Max Motor Frame Size: 145T			

Performance certified is for installation type A: Free inlet, Free outlet. Power rating (Bhp) does not include transmission losses. Performance ratings do not include the effects of appurtenances. The sound ratings shown are loudness values in fan sones at 5 ft. (1.5 m) in a hemispherical free field calculated per AMCA Standard 301. Values shown are for installation type A: Free inlet hemispherical sone levels. FEI calculation is based on default motor calculation in accordance with ANS/AMCA Standard 208.

PRD 150-080 BELT DRIVE

RPM	Tip Speed	Max Sones	0.00"SP		0.25"SP		0.50"SP		0.62"SP		0.88"SP		1.12"SP		1.38"SP		1.62"SP		1.75"SP		2.00"SP		2.25"SP	
			CFM		CFM		CFM		CFM		CFM		CFM		CFM		CFM		CFM		CFM		CFM	
			BHP	FEI	BHP	FEI	BHP	FEI	BHP	FEI	BHP	FEI	BHP	FEI	BHP	FEI	BHP	FEI	BHP	FEI	BHP	FEI	BHP	FEI
547	2148	4.0	957																					
			0.03	2.36																				
691	2714	6.0	1213		772																			
			0.05	2.17	0.06	2.11																		
835	3281	8.4	1476		1151																			
			0.09	1.7	0.1	1.91																		
980	3847	11.3	1739		1464		1109		668															
			0.15	1.32	0.16	1.6	0.17	1.68	0.14	1.59														
1124	4414	15.1	2002		1759		1503		1338															
			0.22	1.04	0.24	1.33	0.26	1.48	0.26	1.52														
1268	4980	18.1	2281		2068		1857		1730		1412													
			0.34	0.82	0.36	1.08	0.38	1.24	0.39	1.31	0.38	1.38												
1412	5546	21	2561		2359		2168		2072		1830		1504											
			0.48	0.66	0.48	0.92	0.52	1.08	0.53	1.14	0.54	1.25	0.53	1.28										
1557	6113	25	2841		2644		2483		2376		2196		1962		1618									
			0.66	0.55	0.63	0.81	0.68	0.94	0.7	1.01	0.72	1.11	0.72	1.18	0.7	1.2								
1701	6679	29	3120		2961		2802		2722		2543		2364		2146		1867		1668					
			0.88	0.46	0.91	0.63	0.93	0.78	0.94	0.85	0.96	0.97	0.98	1.06	0.98	1.12	0.96	1.14	0.94	1.14				
1845	7245	33	3385		3234		3083		3018		2867		2694		2522		2328		2198		1896		1357	
			1.12	0.39	1.15	0.55	1.18	0.69	1.19	0.74	1.22	0.86	1.24	0.95	1.25	1.03	1.25	1.08	1.25	1.1	1.21	1.1	1.07	1.04

Maximum RPM 1845	Max HP: 1.50	Outlet Area (Sq.Ft.): 2.46	Wheel Diameter (in): 15	Tip Speed: 3.93 x RPM	Max Motor Frame Size: 145T

Performance certified is for installation type A: Free inlet, Free outlet. Power rating (Bhp) does not include transmission losses. Performance ratings do not include the effects of appurtenances. The sound ratings shown are loudness values in fan sones at 5 ft. (1.5 m) in a hemispherical free field calculated per AMCA Standard 301. Values shown are for installation type A: Free inlet hemispherical sone levels. FEI calculation is based on default motor calculation in accordance with ANS/AMCA Standard 208.

PRD 150-050 BELT DRIVE

RPM	Tip Speed	Max Sones	0.00"SP		0.25"SP		0.50"SP		0.75"SP		1.00"SP		1.25"SP		1.38"SP		1.62"SP		1.88"SP		2.12"SP		2.38"SP	
			CFM		CFM		CFM		CFM		CFM		CFM		CFM		CFM		CFM		CFM		CFM	
			BHP	FEI	BHP	FEI	BHP	FEI	BHP	FEI	BHP	FEI	BHP	FEI	BHP	FEI	BHP	FEI	BHP	FEI	BHP	FEI	BHP	FEI
547	2148	3.5	644																					
			0.05	1.41																				
722	2835	5.8	881		536																			
			0.09	1.26	0.09	1.33																		
897	3523	8.7	1103		830		414																	
			0.11	1.22	0.11	1.45	0.11	1.28																
1072	4210	12.8	1325		1086		857																	
			0.14	1.12	0.14	1.42	0.15	1.54																
1247	4897	16.0	1555		1353		1166		940		548													
			0.18	1.03	0.19	1.33	0.20	1.52	0.20	1.58	0.20	1.37												
1422	5584	19.6	1788		1608		1443		1264		1042		690											
			0.23	0.93	0.24	1.25	0.25	1.45	0.26	1.57	0.27	1.60	0.26	1.46										
1597	6271	23	2021		1862		1704		1563		1389		1184		1041		612							
			0.30	0.83	0.29	1.16	0.32	1.37	0.33	1.50	0.35	1.58	0.35	1.61	0.35	1.59	0.31	1.39						
1772	6959	28	2248		2125		1984		1860		1719		1560		1472		1277		1030		642			
			0.40	0.71	0.41	0.95	0.43	1.18	0.45	1.33	0.46	1.45	0.48	1.53	0.48	1.56	0.48	1.57	0.47	1.53	0.42	1.34		
1947	7646	30	2470		2354		2238		2121		1986		1869		1792		1656		1481		1268		996	
			0.53	0.60	0.54	0.82	0.56	1.01	0.58	1.17	0.60	1.31	0.62	1.40	0.63	1.44	0.64	1.49	0.64	1.51	0.63	1.50	0.60	1.43
2122	8333	36	2692		2587		2481		2354		2249		2143		2079		1953		1826		1678		1509	
			0.68	0.51	0.70	0.70	0.71	0.88	0.74	1.06	0.76	1.17	0.78	1.27	0.79	1.32	0.81	1.39	0.82	1.43	0.83	1.46	0.83	1.47

Maximum RPM 2122	Max HP: 1.50	Outlet Area (Sq.Ft.): 2.46	Wheel Diameter (in): 15	Tip Speed: 3.93 x RPM	Max Motor Frame Size: 145T

Performance certified is for installation type A: Free inlet, Free outlet. Power rating (Bhp) does not include transmission losses. Performance ratings do not include the effects of appurtenances. The sound ratings shown are loudness values in fan sones at 5 ft. (1.5 m) in a hemispherical free field calculated per AMCA Standard 301. Values shown are for installation type A: Free inlet hemispherical sone levels. FEI calculation is based on default motor calculation in accordance with ANS/AMCA Standard 208.

PRD 165-100 BELT DRIVE

RPM	Tip Speed	Max Sones	0.00"SP		0.12"SP		0.38"SP		0.50"SP		0.62"SP		0.88"SP		1.00"SP		1.12"SP		1.25"SP		1.50"SP		1.62"SP	
			CFM		CFM		CFM		CFM		CFM		CFM		CFM		CFM		CFM		CFM		CFM	
			BHP	FEI	BHP	FEI	BHP	FEI	BHP	FEI	BHP	FEI	BHP	FEI	BHP	FEI	BHP	FEI	BHP	FEI	BHP	FEI	BHP	FEI
427	1509	2.8	589																					
			0.01	0.65																				
580	2050	5.9	820		575																			
			0.02	2.19	0.02	2.19																		
733	2591	8.2	1051		868																			
			0.04	2.09	0.05	2.16																		
886	3133	11.6	1282		1136		699																	
			0.08	1.69	0.08	1.86	0.08	1.84																
1039	3674	16.6	1512		1387		1090		859															
			0.13	1.34	0.13	1.56	0.14	1.68	0.14	1.67														
1193	4215	20	1743		1631		1398		1253		1064													
			0.19	1.07	0.18	1.31	0.21	1.46	0.21	1.51	0.21	1.53												
1346	4756	24	1975		1892		1700		1586		1461		1088											
			0.27	0.88	0.27	1.06	0.3	1.25	0.31	1.33	0.31	1.38	0.3	1.4										
1499	5297	29	2206		2125		1954		1870		1771		1519		1365		1127							
			0.38	0.73	0.35	0.94	0.4	1.11	0.41	1.18	0.42	1.24	0.42	1.33	0.42	1.34	0.4	1.31						
1652	5838	34	2438		2362		2221		2143		2049		1863		1754		1614		1443					
			0.5	0.62	0.43	0.84	0.51	0.97	0.53	1.04	0.54	1.11	0.56	1.22	0.56	1.25	0.56	1.28	0.55	1.28				
1805	6379	39	2667		2616		2479		2411		2343		2190		2105		2002		1900		1628		1440	
			0.66	0.52	0.67	0.61	0.7	0.81	0.72	0.89	0.73	0.95	0.75	1.07	0.75	1.12	0.76	1.16	0.76	1.19	0.75	1.22	0.72	1.21
Maximum RPM 1805					Max HP: 3.00				Outlet Area (Sq.Ft.): 1.99				Wheel Diameter (in): 13.5				Tip Speed: 3.53 x RPM				Max Motor Frame Size: 145T			

Performance certified is for installation type A: Free inlet, Free outlet. Power rating (Bhp) does not include transmission losses. Performance ratings do not include the effects of appurtenances. The sound ratings shown are loudness values in fan sones at 5 ft. (1.5 m) in a hemispherical free field calculated per AMCA Standard 301. Values shown are for installation type A: Free inlet hemispherical sone levels. FEI calculation is based on default motor calculation in accordance with ANS/AMCA Standard 208.

PRD 165-080 BELT DRIVE

RPM	Tip Speed	Max Sones	0.00"SP		0.25"SP		0.50"SP		0.75"SP		1.00"SP		1.25"SP		1.50"SP		1.75"SP		2.00"SP		2.25"SP		2.50"SP	
			CFM		CFM		CFM		CFM		CFM		CFM		CFM		CFM		CFM		CFM		CFM	
			BHP	FEI	BHP	FEI	BHP	FEI	BHP	FEI	BHP	FEI	BHP	FEI	BHP	FEI	BHP	FEI	BHP	FEI	BHP	FEI	BHP	FEI
427	1845	2.7	992																					
			0.02	2.44																				
580	2506	5.7	1353		654																			
			0.05	2.37	0.05	2.18																		
733	3167	7.9	1722		1310																			
			0.09	1.79	0.11	1.95																		
886	3829	11.2	2094		1763		1322																	
			0.17	1.32	0.19	1.59	0.2	1.65																
1039	4490	16.1	2468		2203		1902		1465															
			0.29	0.99	0.33	1.21	0.34	1.4	0.33	1.46														
1193	5151	19.6	2863		2609		2362		2075		1620													
			0.46	0.75	0.48	1.01	0.51	1.17	0.52	1.29	0.5	1.31												
1346	5813	23	3259		3017		2793		2567		2279		1864											
			0.68	0.59	0.67	0.85	0.72	1	0.74	1.12	0.75	1.2	0.73	1.22										
1499	6474	28	3654		3442		3233		3024		2792		2513		2141		1396							
			0.96	0.48	0.88	0.72	0.96	0.85	1.01	0.97	1.03	1.06	1.04	1.13	1.02	1.15	0.87	1.06						
1652	7136	33	4034		3854		3674		3494		3288		3082		2851		2568		2131					
			1.3	0.39	1.33	0.55	1.37	0.69	1.4	0.81	1.42	0.92	1.44	1	1.45	1.05	1.44	1.09	1.38	1.08				
1805	7797	38	4408		4239		4070		3902		3733		3565		3368		3143		2890		2581		2104	
			1.69	0.33	1.73	0.47	1.77	0.6	1.81	0.71	1.84	0.81	1.86	0.88	1.88	0.95	1.89	1.01	1.88	1.05	1.85	1.06	1.73	1.03
Maximum RPM 1805					Max HP: 3.00				Outlet Area (Sq.Ft.): 2.94				Wheel Diameter (in): 16.5				Tip Speed: 4.32 x RPM				Max Motor Frame Size: 145T			

Performance certified is for installation type A: Free inlet, Free outlet. Power rating (Bhp) does not include transmission losses. Performance ratings do not include the effects of appurtenances. The sound ratings shown are loudness values in fan sones at 5 ft. (1.5 m) in a hemispherical free field calculated per AMCA Standard 301. Values shown are for installation type A: Free inlet hemispherical sone levels. FEI calculation is based on default motor calculation in accordance with ANS/AMCA Standard 208.

PRD 165-050 BELT DRIVE

RPM	Tip Speed	Max Sones	0.00"SP		0.25"SP		0.62"SP		0.88"SP		1.12"SP		1.50"SP		1.75"SP		2.00"SP		2.25"SP		2.62"SP		2.88"SP	
			CFM		CFM		CFM		CFM		CFM		CFM		CFM		CFM		CFM		CFM		CFM	
			BHP	FEI	BHP	FEI	BHP	FEI	BHP	FEI	BHP	FEI	BHP	FEI	BHP	FEI	BHP	FEI	BHP	FEI	BHP	FEI	BHP	FEI
427	1845	2.3	649																					
			0.05	1.42																				
610	2636	5.6	988		472																			
			0.10	1.24	0.10	1.19																		
793	3427	8.3	1298		967																			
			0.13	1.21	0.13	1.41																		
977	4219	12.2	1607		1330		838																	
			0.17	1.10	0.18	1.39	0.18	1.45																
1160	5010	17.1	1928		1692		1356		1043															
			0.23	0.99	0.24	1.29	0.26	1.53	0.26	1.52														
1343	5802	21	2253		2042		1746		1537		1256													
			0.31	0.88	0.31	1.21	0.34	1.48	0.35	1.56	0.36	1.56												
1526	6593	26	2577		2394		2131		1949		1747		1343		898									
			0.41	0.77	0.39	1.10	0.44	1.37	0.46	1.49	0.48	1.56	0.48	1.56	0.43	1.41								
1710	7385	31	2887		2728		2524		2366		2207		1935		1731		1459		1119					
			0.57	0.62	0.59	0.88	0.62	1.14	0.65	1.28	0.67	1.39	0.69	1.48	0.70	1.51	0.69	1.48	0.65	1.39				
1893	8176	37	3197		3071		2870		2720		2594		2368		2193		2017		1816		1415		1013	
			0.78	0.52	0.80	0.71	0.83	0.97	0.86	1.13	0.88	1.23	0.92	1.36	0.94	1.42	0.95	1.45	0.95	1.45	0.91	1.40	0.84	1.26
2076	8968	41	3506		3396		3203		3066		2955		2763		2625		2487		2322		2075		1854	
			1.03	0.43	1.04	0.59	1.08	0.84	1.11	0.99	1.14	1.09	1.18	1.23	1.21	1.30	1.23	1.35	1.25	1.39	1.25	1.41	1.24	1.40
Maximum RPM 2076					Max HP: 3.00				Outlet Area (Sq.Ft.): 2.94				Wheel Diameter (in): 16.5				Tip Speed: 4.32 x RPM				Max Motor Frame Size: 145T			

Performance certified is for installation type A: Free inlet, Free outlet. Power rating (Bhp) does not include transmission losses. Performance ratings do not include the effects of appurtenances. The sound ratings shown are loudness values in fan sones at 5 ft. (1.5 m) in a hemispherical free field calculated per AMCA Standard 301. Values shown are for installation type A: Free inlet hemispherical sone levels. FEI calculation is based on default motor calculation in accordance with ANS/AMCA Standard 208.

PRD 182-100 BELT DRIVE

RPM	Tip Speed	Max Sones	0.00"SP		0.25"SP		0.50"SP		0.62"SP		0.88"SP		1.12"SP		1.38"SP		1.62"SP		1.75"SP		2.00"SP		2.25"SP	
			CFM		CFM		CFM		CFM		CFM		CFM		CFM		CFM		CFM		CFM		CFM	
			BHP	FEI	BHP	FEI	BHP	FEI	BHP	FEI	BHP	FEI	BHP	FEI	BHP	FEI	BHP	FEI	BHP	FEI	BHP	FEI	BHP	FEI
427	2040	3.4	1347																					
			0.05	2.22																				
553	2644	5.8	1641																					
			0.08	2																				
680	3248	8.1	1935		1117																			
			0.11	1.73	0.11	1.79																		
806	3853	10.8	2229		1638																			
			0.16	1.47	0.16	1.78																		
933	4457	13.9	3030		2646		2089		1437															
			0.33	1.04	0.34	1.35	0.35	1.45	0.32	1.35														
1059	5061	17.3	3881		3589		3240		3043		2529													
			0.63	0.72	0.71	0.92	0.73	1.12	0.73	1.19	0.72	1.26												
1186	5665	21	4347		4108		3793		3652		3264		2750		1730									
			0.87	0.6	1.06	0.71	1.03	0.93	1.03	1	1.02	1.13	0.98	1.19	0.84	1.09								
1312	6269	24	4833		4582		4327		4176		3854		3480		2953		1941							
			1.19	0.49	1.23	0.69	1.3	0.83	1.32	0.91	1.33	1.03	1.32	1.11	1.28	1.15	1.09	1.06						
1439	6873	28	5341		5138		4894		4792		4491		4193		3798		3301		2931					
			1.6	0.41	1.51	0.61	1.66	0.74	1.69	0.79	1.74	0.92	1.76	1	1.74	1.07	1.69	1.1	1.62	1.1				
1565	7477	31	5846		5698		5513		5402		5180		4921		4625		4254		4032		3514		2736	
			2.08	0.34	2.16	0.48	2.24	0.61	2.27	0.67	2.32	0.78	2.35	0.88	2.36	0.96	2.33	1.02	2.31	1.04	2.21	1.07	2	1.04
Maximum RPM 1565					Max HP: 3.00				Outlet Area (Sq.Ft.): 3.59				Wheel Diameter (in): 18.25				Tip Speed: 4.78 x RPM				Max Motor Frame Size: 184T			

Performance certified is for installation type A: Free inlet, Free outlet. Power rating (Bhp) does not include transmission losses. Performance ratings do not include the effects of appurtenances. The sound ratings shown are loudness values in fan sones at 5 ft. (1.5 m) in a hemispherical free field calculated per AMCA Standard 301. Values shown are for installation type A: Free inlet hemispherical sone levels. FEI calculation is based on default motor calculation in accordance with ANS/AMCA Standard 208.

PRD 182-080 BELT DRIVE

RPM	Tip Speed	Max Sones	0.00"SP		0.25"SP		0.50"SP		0.88"SP		1.12"SP		1.38"SP		1.62"SP		1.88"SP		2.25"SP		2.50"SP		2.75"SP	
			CFM		CFM		CFM		CFM		CFM		CFM		CFM		CFM		CFM		CFM		CFM	
			BHP	FEI	BHP	FEI	BHP	FEI	BHP	FEI	BHP	FEI	BHP	FEI	BHP	FEI	BHP	FEI	BHP	FEI	BHP	FEI	BHP	FEI
427	2040	3.3	1358																					
			0.04	2.43																				
562	2686	5.8	1815		1127																			
			0.07	2.19	0.08	2.2																		
697	3331	8.3	2276		1825																			
			0.13	1.77	0.15	2.01																		
832	3977	11.2	2760		2382		1900																	
			0.23	1.3	0.26	1.57	0.26	1.76																
967	4622	14.4	3244		2911		2543		1493															
			0.38	0.98	0.41	1.27	0.43	1.46	0.38	1.45														
1103	5268	18.0	3719		3465		3179		2635		2026													
			0.61	0.72	0.72	0.89	0.72	1.09	0.72	1.29	0.67	1.3												
1238	5913	22	4191		3998		3728		3296		2950		2478		1637									
			0.92	0.55	1.15	0.64	1.1	0.87	1.11	1.06	1.11	1.14	1.07	1.16	0.92	1.08								
1373	6559	25	4630		4443		4214		3867		3603		3250		2835		2183							
			1.25	0.45	1.43	0.58	1.42	0.76	1.45	0.95	1.46	1.03	1.46	1.1	1.44	1.13	1.33	1.09						
1508	7204	29	5066		4909		4728		4418		4197		3941		3651		3325		2509					
			1.64	0.38	2.04	0.46	1.92	0.63	1.93	0.82	1.94	0.92	1.95	1	1.95	1.06	1.93	1.09	1.79	1.07				
1643	7850	34	5502		5362		5187		4908		4733		4524		4279		4000		3510		3056		2287	
			2.11	0.32	2.18	0.45	2.26	0.58	2.35	0.75	2.39	0.83	2.43	0.91	2.45	0.98	2.46	1.03	2.42	1.07	2.35	1.06	2.1	1

Maximum RPM 1643	Max HP: 3.00	Outlet Area (Sq.Ft.): 3.59	Wheel Diameter (in): 18.25	Tip Speed: 4.78 x RPM	Max Motor Frame Size: 184T

Performance certified is for installation type A: Free inlet, Free outlet. Power rating (Bhp) does not include transmission losses. Performance ratings do not include the effects of appurtenances. The sound ratings shown are loudness values in fan sones at 5 ft. (1.5 m) in a hemispherical free field calculated per AMCA Standard 301. Values shown are for installation type A: Free inlet hemispherical sone levels. FEI calculation is based on default motor calculation in accordance with ANS/AMCA Standard 208.

PRD 182-050 BELT DRIVE

RPM	Tip Speed	Max Sones	0.00"SP		0.38"SP		0.62"SP		1.00"SP		1.25"SP		1.62"SP		1.88"SP		2.25"SP		2.50"SP		2.88"SP		3.12"SP	
			CFM		CFM		CFM		CFM		CFM		CFM		CFM		CFM		CFM		CFM		CFM	
			BHP	FEI	BHP	FEI	BHP	FEI	BHP	FEI	BHP	FEI	BHP	FEI	BHP	FEI	BHP	FEI	BHP	FEI	BHP	FEI	BHP	FEI
427	2040	2.9	911																					
			0.05	1.82																				
580	2769	5.4	1249																					
			0.08	1.64																				
732	3498	8.0	1584		1060																			
			0.13	1.34	0.14	1.63																		
885	4227	11.0	1913		1515		1184																	
			0.21	1.07	0.24	1.39	0.23	1.54																
1037	4956	14.6	2243		1902		1661		1094															
			0.32	0.86	0.37	1.15	0.36	1.35	0.33	1.42														
1190	5685	18.0	2573		2294		2099		1772		1446													
			0.45	0.71	0.54	0.95	0.55	1.12	0.55	1.28	0.53	1.31												
1342	6413	22	2912		2647		2483		2192		1992		1497											
			0.65	0.57	0.71	0.84	0.74	0.97	0.78	1.14	0.78	1.2	0.74	1.22										
1495	7142	25	3257		3016		2852		2627		2444		2137		1870									
			0.92	0.45	0.95	0.71	1.01	0.83	1.06	0.98	1.08	1.06	1.09	1.15	1.07	1.16								
1647	7871	30	3603		3376		3240		3013		2877		2627		2445		2082		1695					
			1.25	0.37	1.23	0.61	1.32	0.71	1.4	0.86	1.43	0.93	1.46	1.04	1.47	1.08	1.44	1.11	1.35	1.09				
1800	8600	35	3948		3748		3623		3448		3299		3099		2949		2724		2525		2150		1751	
			1.65	0.31	1.78	0.49	1.84	0.59	1.9	0.71	1.94	0.81	1.97	0.91	1.99	0.96	1.99	1.03	1.98	1.06	1.91	1.07	1.78	1.03

Maximum RPM 1800	Max HP: 3.00	Outlet Area (Sq.Ft.): 3.59	Wheel Diameter (in): 18.25	Tip Speed: 4.78 x RPM	Max Motor Frame Size: 184T

Performance certified is for installation type A: Free inlet, Free outlet. Power rating (Bhp) does not include transmission losses. Performance ratings do not include the effects of appurtenances. The sound ratings shown are loudness values in fan sones at 5 ft. (1.5 m) in a hemispherical free field calculated per AMCA Standard 301. Values shown are for installation type A: Free inlet hemispherical sone levels. FEI calculation is based on default motor calculation in accordance with ANS/AMCA Standard 208.

PRD 200-100 BELT DRIVE

RPM	Tip Speed	Max Sones	0.00"SP		0.12"SP		0.38"SP		0.50"SP		0.75"SP		0.88"SP		1.00"SP		1.25"SP		1.38"SP		1.62"SP		1.75"SP	
			CFM		CFM		CFM		CFM		CFM		CFM		CFM		CFM		CFM		CFM		CFM	
			BHP	FEI	BHP	FEI	BHP	FEI	BHP	FEI	BHP	FEI	BHP	FEI	BHP	FEI	BHP	FEI	BHP	FEI	BHP	FEI	BHP	FEI
427	2236	4.2	1732		1222																			
			0.07	2.19	0.07	2.14																		
527	2758	6.6	2037		1631																			
			0.1	1.96	0.1	2.1																		
627	3281	8.4	2343		1994																			
			0.14	1.71	0.13	1.96																		
726	3803	10.7	2648		2346																			
			0.19	1.48	0.17	1.77																		
826	4326	13.4	3296		3054		2431		1784															
			0.31	1.16	0.31	1.38	0.33	1.53	0.31	1.44														
926	4848	16.3	4463		4298		3899		3672		3079		2600											
			0.67	0.77	0.73	0.86	0.75	1.09	0.77	1.17	0.77	1.27	0.74	1.25										
1026	5370	19.6	4948		4805		4447		4255		3781		3532		3161									
			0.9	0.64	1.14	0.63	1.05	0.91	1.05	1	1.05	1.15	1.04	1.19	1.01	1.21								
1125	5893	22	5432		5320		4990		4810		4421		4213		3974		3337		2872					
			1.18	0.55	1.83	0.45	1.42	0.76	1.41	0.85	1.39	1.01	1.38	1.07	1.37	1.12	1.32	1.16	1.26	1.14				
1225	6415	26	5952		5810		5524		5370		5035		4818		4639		4138		3811		2840			
			1.54	0.46	1.46	0.59	1.62	0.73	1.65	0.8	1.7	0.93	1.71	0.99	1.71	1.03	1.69	1.11	1.66	1.12	1.51	1.08		
1325	6938	29	6479		6364		6106		5939		5651		5489		5328		4927		4686		4082		3675	
			1.97	0.4	1.64	0.55	1.96	0.66	2.04	0.73	2.12	0.84	2.15	0.89	2.16	0.94	2.17	1.02	2.16	1.05	2.1	1.09	2.03	1.08
Maximum RPM 1325					Max HP: 5.00				Outlet Area (Sq.Ft.): 4.31				Wheel Diameter (in): 20				Tip Speed: 5.24 x RPM				Max Motor Frame Size: 184T			

Performance certified is for installation type A: Free inlet, Free outlet. Power rating (Bhp) does not include transmission losses. Performance ratings do not include the effects of appurtenances. The sound ratings shown are loudness values in fan sones at 5 ft. (1.5 m) in a hemispherical free field calculated per AMCA Standard 301. Values shown are for installation type A: Free inlet hemispherical sone levels. FEI calculation is based on default motor calculation in accordance with ANS/AMCA Standard 208.

PRD 200-080 BELT DRIVE

RPM	Tip Speed	Max Sones	0.00"SP		0.25"SP		0.50"SP		0.62"SP		0.88"SP		1.12"SP		1.38"SP		1.62"SP		1.75"SP		2.00"SP		2.25"SP	
			CFM		CFM		CFM		CFM		CFM		CFM		CFM		CFM		CFM		CFM		CFM	
			BHP	FEI	BHP	FEI	BHP	FEI	BHP	FEI	BHP	FEI	BHP	FEI	BHP	FEI	BHP	FEI	BHP	FEI	BHP	FEI	BHP	FEI
427	2236	4.1	1797																					
			0.06	2.44																				
534	2797	6.3	2274		1525																			
			0.1	2.14	0.11	2.22																		
641	3357	8.5	2757		2226																			
			0.16	1.75	0.18	1.98																		
748	3918	11.1	3262		2797		2186		1539															
			0.26	1.32	0.3	1.6	0.29	1.77	0.27	1.63														
855	4479	13.9	3767		3359		2909		2599															
			0.41	1.03	0.44	1.31	0.46	1.5	0.45	1.58														
963	5040	17.0	4266		3942		3561		3344		2803		1725											
			0.62	0.79	0.72	0.98	0.74	1.19	0.73	1.28	0.71	1.38	0.63	1.23										
1070	5601	20	4759		4502		4166		3983		3587		3076		2212									
			0.92	0.62	1.11	0.74	1.09	0.95	1.09	1.03	1.09	1.15	1.07	1.21	0.98	1.16								
1177	6162	24	5239		4981		4684		4551		4220		3821		3321		2520							
			1.26	0.5	1.36	0.67	1.4	0.84	1.42	0.9	1.44	1.02	1.46	1.1	1.44	1.14	1.33	1.1						
1284	6722	27	5693		5469		5225		5084		4835		4512		4150		3677		3422		2582			
			1.62	0.43	1.87	0.55	1.84	0.72	1.85	0.79	1.87	0.9	1.89	1	1.9	1.06	1.88	1.1	1.85	1.11	1.69	1.05		
1391	7283	30	6148		5960		5741		5629		5403		5136		4826		4513		4316		3881		3246	
			2.04	0.37	2.55	0.45	2.38	0.62	2.38	0.68	2.39	0.79	2.41	0.89	2.43	0.98	2.43	1.03	2.42	1.06	2.38	1.08	2.27	1.06
Maximum RPM 1391					Max HP: 5.00				Outlet Area (Sq.Ft.): 4.31				Wheel Diameter (in): 20				Tip Speed: 5.24 x RPM				Max Motor Frame Size: 184T			

Performance certified is for installation type A: Free inlet, Free outlet. Power rating (Bhp) does not include transmission losses. Performance ratings do not include the effects of appurtenances. The sound ratings shown are loudness values in fan sones at 5 ft. (1.5 m) in a hemispherical free field calculated per AMCA Standard 301. Values shown are for installation type A: Free inlet hemispherical sone levels. FEI calculation is based on default motor calculation in accordance with ANS/AMCA Standard 208.

PRD 200-050 BELT DRIVE

RPM	Tip Speed	Max Sones	0.00"SP		0.38"SP		0.62"SP		1.00"SP		1.25"SP		1.62"SP		1.88"SP		2.25"SP		2.50"SP		2.88"SP		3.12"SP	
			CFM		CFM		CFM		CFM		CFM		CFM		CFM		CFM		CFM		CFM		CFM	
			BHP	FEI	BHP	FEI	BHP	FEI	BHP	FEI	BHP	FEI	BHP	FEI	BHP	FEI	BHP	FEI	BHP	FEI	BHP	FEI	BHP	FEI
427	2236	3.5	1203																					
			0.06	1.81																				
550	2879	5.9	1562																					
			0.1	1.59																				
673	3523	8.2	1915		1283																			
			0.16	1.31	0.17	1.6																		
796	4166	10.9	2265		1777		1357																	
			0.24	1.07	0.27	1.39	0.26	1.52																
919	4810	14.0	2614		2180		1883																	
			0.35	0.87	0.4	1.19	0.39	1.38																
1041	5453	17.4	2964		2600		2357		1905		1381													
			0.48	0.74	0.58	1	0.59	1.17	0.58	1.32	0.53	1.28												
1164	6096	21	3317		2976		2769		2418		2107													
			0.66	0.62	0.74	0.9	0.77	1.03	0.8	1.18	0.8	1.24												
1287	6740	24	3683		3367		3183		2860		2629		2190		1678									
			0.91	0.5	0.98	0.77	1.03	0.89	1.08	1.05	1.09	1.13	1.08	1.18	1	1.14								
1410	7383	28	4049		3747		3569		3314		3111		2780		2499		1784							
			1.22	0.42	1.26	0.68	1.34	0.79	1.4	0.92	1.43	1.01	1.45	1.09	1.44	1.12	1.3	1.08						
1533	8027	31	4415		4137		3969		3719		3552		3274		3051		2661		2298					
			1.6	0.35	1.57	0.59	1.68	0.69	1.78	0.83	1.82	0.9	1.86	1	1.87	1.05	1.85	1.09	1.78	1.08				

Maximum RPM 1533	Max HP: 5.00	Outlet Area (Sq.Ft.): 4.31	Wheel Diameter (in): 20	Tip Speed: 5.24 x RPM	Max Motor Frame Size: 184T

Performance certified is for installation type A: Free inlet, Free outlet. Power rating (Bhp) does not include transmission losses. Performance ratings do not include the effects of appurtenances. The sound ratings shown are loudness values in fan sones at 5 ft. (1.5 m) in a hemispherical free field calculated per AMCA Standard 301. Values shown are for installation type A: Free inlet hemispherical sone levels. FEI calculation is based on default motor calculation in accordance with ANS/AMCA Standard 208.

PRD 222-100 BELT DRIVE

RPM	Tip Speed	Max Sones	0.00"SP		0.25"SP		0.38"SP		0.62"SP		0.75"SP		1.00"SP		1.25"SP		1.38"SP		1.62"SP		1.75"SP		2.00"SP	
			CFM		CFM		CFM		CFM		CFM		CFM		CFM		CFM		CFM		CFM		CFM	
			BHP	FEI	BHP	FEI	BHP	FEI	BHP	FEI	BHP	FEI	BHP	FEI	BHP	FEI	BHP	FEI	BHP	FEI	BHP	FEI	BHP	FEI
427	2487	5.3	2634																					
			0.11	2.14																				
518	3020	7.5	3222		2436																			
			0.18	1.8	0.19	2.03																		
610	3553	9.8	3853		3233		2833																	
			0.29	1.39	0.3	1.78	0.32	1.76																
701	4085	12.4	4518		3946		3650		2672															
			0.47	1.05	0.45	1.48	0.48	1.55	0.49	1.51														
793	4618	15.3	5182		4638		4380		3777		3317													
			0.72	0.82	0.65	1.25	0.68	1.33	0.73	1.41	0.74	1.4												
884	5151	18.3	5821		5342		5116		4627		4334		3461											
			0.96	0.7	0.94	1	0.97	1.1	1.02	1.25	1.04	1.29	1.02	1.3										
976	5683	22	6448		5960		5781		5351		5135		4561		3594									
			1.23	0.61	1.22	0.88	1.27	0.95	1.34	1.1	1.36	1.16	1.39	1.24	1.32	1.23								
1067	6216	25	7093		6680		6487		6103		5912		5492		4955		4569							
			1.61	0.51	1.68	0.71	1.73	0.8	1.8	0.94	1.83	1.01	1.87	1.11	1.87	1.18	1.85	1.2						
1159	6749	29	7762		7380		7166		6826		6656		6275		5851		5596		4957		4442			
			2.15	0.43	2.07	0.63	2.16	0.71	2.26	0.84	2.3	0.9	2.37	1	2.41	1.08	2.42	1.11	2.39	1.15	2.3	1.14		
1250	7281	32	8430		8049		7862		7535		7396		7023		6650		6464		5998		5718		4925	
			2.78	0.36	2.53	0.57	2.65	0.64	2.8	0.76	2.84	0.8	2.94	0.91	3.01	0.99	3.03	1.02	3.06	1.08	3.05	1.1	2.93	1.1

Maximum RPM 1250	Max HP: 5.00	Outlet Area (Sq.Ft.): 5.36	Wheel Diameter (in): 22.25	Tip Speed: 5.83 x RPM	Max Motor Frame Size: 184T

Performance certified is for installation type A: Free inlet, Free outlet. Power rating (Bhp) does not include transmission losses. Performance ratings do not include the effects of appurtenances. The sound ratings shown are loudness values in fan sones at 5 ft. (1.5 m) in a hemispherical free field calculated per AMCA Standard 301. Values shown are for installation type A: Free inlet hemispherical sone levels. FEI calculation is based on default motor calculation in accordance with ANS/AMCA Standard 208.

PRD 222-080 BELT DRIVE

RPM	Tip Speed	Max Sones	0.00"SP		0.25"SP		0.50"SP		0.75"SP		1.00"SP		1.25"SP		1.50"SP		1.75"SP		2.00"SP		2.25"SP		2.50"SP	
			CFM		CFM		CFM		CFM		CFM		CFM		CFM		CFM		CFM		CFM		CFM	
			BHP	FEI	BHP	FEI	BHP	FEI	BHP	FEI	BHP	FEI	BHP	FEI	BHP	FEI	BHP	FEI	BHP	FEI	BHP	FEI	BHP	FEI
427	2487	5.1	2489		1147																			
			0.09	2.36	0.1	1.98																		
525	3061	7.5	3093		2304																			
			0.15	1.98	0.17	2.17																		
624	3634	10.0	3720		3107		2126																	
			0.25	1.51	0.29	1.77	0.27	1.83																
722	4208	12.8	4359		3839		3184		1685															
			0.41	1.15	0.45	1.43	0.46	1.62	0.4	1.39														
821	4781	15.9	4999		4547		4072		3406		1980													
			0.62	0.9	0.72	1.12	0.74	1.32	0.71	1.48	0.63	1.27												
919	5355	19.1	5622		5276		4844		4341		3700		2569											
			0.96	0.68	1.14	0.82	1.14	1.03	1.15	1.18	1.12	1.26	1.01	1.18										
1018	5928	23	6245		5958		5556		5153		4673		4083		3226									
			1.38	0.53	1.73	0.62	1.65	0.84	1.66	0.98	1.66	1.08	1.64	1.13	1.55	1.11								
1116	6501	26	6824		6546		6208		5867		5479		5003		4437		3651							
			1.82	0.45	2.06	0.58	2.05	0.75	2.08	0.88	2.11	0.99	2.12	1.06	2.1	1.1	2.01	1.09						
1215	7075	30	7400		7167		6900		6583		6261		5889		5466		4945		4278		3278			
			2.32	0.38	2.84	0.46	2.69	0.63	2.7	0.77	2.72	0.87	2.74	0.96	2.75	1.03	2.73	1.07	2.65	1.07	2.42	1.01		
1313	7648	34	7975		7791		7559		7273		6981		6685		6334		5929		5520		4953		4178	
			2.91	0.33	3.93	0.36	3.49	0.53	3.44	0.66	3.45	0.77	3.47	0.86	3.49	0.94	3.49	1	3.47	1.04	3.41	1.05	3.26	1.03
Maximum RPM 1313					Max HP: 5.00				Outlet Area (Sq.Ft.): 5.36				Wheel Diameter (in): 22.25				Tip Speed: 5.83 x RPM				Max Motor Frame Size: 184T			

Performance certified is for installation type A: Free inlet, Free outlet. Power rating (Bhp) does not include transmission losses. Performance ratings do not include the effects of appurtenances. The sound ratings shown are loudness values in fan sones at 5 ft. (1.5 m) in a hemispherical free field calculated per AMCA Standard 301. Values shown are for installation type A: Free inlet hemispherical sone levels. FEI calculation is based on default motor calculation in accordance with ANS/AMCA Standard 208.

PRD 222-050 BELT DRIVE

RPM	Tip Speed	Max Sones	0.00"SP		0.38"SP		0.62"SP		1.00"SP		1.25"SP		1.62"SP		1.88"SP		2.25"SP		2.50"SP		2.88"SP		3.12"SP	
			CFM		CFM		CFM		CFM		CFM		CFM		CFM		CFM		CFM		CFM		CFM	
			BHP	FEI	BHP	FEI	BHP	FEI	BHP	FEI	BHP	FEI	BHP	FEI	BHP	FEI	BHP	FEI	BHP	FEI	BHP	FEI	BHP	FEI
427	2487	4.5	1663																					
			0.1	1.74																				
539	3142	7.0	2113		1063																			
			0.15	1.46	0.15	1.54																		
652	3796	9.5	2554		1865		975																	
			0.24	1.19	0.26	1.51	0.22	1.37																
764	4450	12.5	2994		2434		2011																	
			0.36	0.96	0.42	1.26	0.39	1.45																
876	5105	15.7	3434		2938		2612		1896															
			0.51	0.8	0.59	1.08	0.59	1.25	0.55	1.36														
989	5759	19.6	3875		3457		3187		2695		2252													
			0.69	0.67	0.83	0.91	0.85	1.06	0.86	1.23	0.84	1.26												
1101	6413	23	4329		3934		3690		3258		2933		2225											
			0.96	0.55	1.05	0.81	1.11	0.94	1.16	1.1	1.16	1.17	1.1	1.17										
1213	7068	27	4789		4405		4194		3834		3564		3112		2660									
			1.32	0.45	1.38	0.71	1.46	0.82	1.53	0.97	1.56	1.05	1.56	1.12	1.52	1.13								
1326	7722	30	5250		4888		4690		4359		4128		3764		3467		2870		2141					
			1.75	0.37	1.76	0.62	1.87	0.72	1.98	0.86	2.02	0.94	2.05	1.03	2.05	1.07	1.99	1.08	1.79	1.02				
1438	8376	35	5711		5383		5167		4878		4698		4374		4121		3724		3364		2534			
			2.26	0.31	2.16	0.54	2.35	0.64	2.49	0.77	2.54	0.83	2.61	0.93	2.63	0.99	2.63	1.04	2.59	1.06	2.37	1.01		
Maximum RPM 1438					Max HP: 5.00				Outlet Area (Sq.Ft.): 5.36				Wheel Diameter (in): 22.25				Tip Speed: 5.83 x RPM				Max Motor Frame Size: 184T			

Performance certified is for installation type A: Free inlet, Free outlet. Power rating (Bhp) does not include transmission losses. Performance ratings do not include the effects of appurtenances. The sound ratings shown are loudness values in fan sones at 5 ft. (1.5 m) in a hemispherical free field calculated per AMCA Standard 301. Values shown are for installation type A: Free inlet hemispherical sone levels. FEI calculation is based on default motor calculation in accordance with ANS/AMCA Standard 208.

PRD 245-100 BELT DRIVE

RPM	Tip Speed	Max Sones	0.00"SP		0.12"SP		0.25"SP		0.38"SP		0.50"SP		0.75"SP		0.88"SP		1.00"SP		1.12"SP		1.25"SP		1.38"SP	
			CFM		CFM		CFM		CFM		CFM		CFM		CFM		CFM		CFM		CFM		CFM	
			BHP	FEI	BHP	FEI	BHP	FEI	BHP	FEI	BHP	FEI	BHP	FEI	BHP	FEI	BHP	FEI	BHP	FEI	BHP	FEI	BHP	FEI
350	2245	5.0	3065		2450																			
			0.1	2.61	0.11	2.58																		
442	2833	7.8	3908		3444		2793																	
			0.2	1.88	0.21	2.06	0.22	2.02																
533	3421	10.7	4751		4359		3920		3330															
			0.36	1.38	0.36	1.62	0.38	1.7	0.39	1.71														
625	4009	13.8	5594		5229		4887		4484		3993													
			0.58	1.05	0.56	1.3	0.6	1.39	0.62	1.47	0.63	1.5												
717	4597	17.2	6437		6104		5807		5476		5145		4054											
			0.88	0.82	0.81	1.06	0.88	1.15	0.92	1.24	0.94	1.31	0.93	1.36										
808	5185	21	7326		7065		6795		6535		6246		5570		5106		4371							
			1.26	0.66	1.24	0.82	1.3	0.93	1.33	1.02	1.36	1.11	1.39	1.23	1.39	1.26	1.33	1.25						
900	5773	25	8241		7990		7775		7563		7310		6727		6395		6021		5479		4636			
			1.74	0.55	1.59	0.74	1.71	0.81	1.78	0.88	1.83	0.96	1.9	1.1	1.92	1.15	1.92	1.18	1.88	1.2	1.78	1.18		
992	6361	29	9132		8945		8757		8569		8334		7912		7630		7348		7019		6644		6127	
			2.33	0.46	2.39	0.56	2.44	0.65	2.49	0.73	2.53	0.81	2.6	0.94	2.62	1	2.64	1.05	2.64	1.09	2.62	1.12	2.58	1.14
1083	6949	33	9976		9823		9669		9464		9258		8899		8643		8438		8181		7873		7566	
			3.03	0.38	3.09	0.46	3.15	0.54	3.21	0.62	3.27	0.7	3.34	0.82	3.38	0.88	3.41	0.93	3.43	0.98	3.44	1.02	3.44	1.06
1175	7537	38	10821		10709		10542		10376		10209		9819		9652		9430		9207		8985		8762	
			3.87	0.33	3.92	0.38	3.99	0.46	4.06	0.53	4.12	0.6	4.23	0.72	4.27	0.77	4.31	0.83	4.34	0.88	4.37	0.92	4.38	0.95
Maximum RPM 1175					Max HP: 7.50				Outlet Area (Sq.Ft.): 5.36				Wheel Diameter (in): 24.5				Tip Speed: 6.41 x RPM				Max Motor Frame Size: 215T			

Performance certified is for installation type A: Free inlet, Free outlet. Power rating (Bhp) does not include transmission losses. Performance ratings do not include the effects of appurtenances. The sound ratings shown are loudness values in fan sones at 5 ft. (1.5 m) in a hemispherical free field calculated per AMCA Standard 301. Values shown are for installation type A: Free inlet hemispherical sone levels. FEI calculation is based on default motor calculation in accordance with ANS/AMCA Standard 208.

PRD 245-080 BELT DRIVE

RPM	Tip Speed	Max Sones	0.00"SP		0.12"SP		0.25"SP		0.50"SP		0.62"SP		0.75"SP		0.88"SP		1.00"SP		1.25"SP		1.38"SP		1.50"SP	
			CFM		CFM		CFM		CFM		CFM		CFM		CFM		CFM		CFM		CFM		CFM	
			BHP	FEI	BHP	FEI	BHP	FEI	BHP	FEI	BHP	FEI	BHP	FEI	BHP	FEI	BHP	FEI	BHP	FEI	BHP	FEI	BHP	FEI
350	2245	5.0	2833		2226																			
			0.09	2.76	0.1	2.5																		
448	2875	8.0	3784		3191		2627																	
			0.17	2.14	0.2	2	0.21	2																
546	3505	11.1	4735		4058		3684																	
			0.3	1.61	0.35	1.58	0.37	1.65																
645	4135	14.5	5687		4928		4608		3842		3198													
			0.49	1.22	0.54	1.26	0.59	1.34	0.62	1.48	0.6	1.48												
743	4765	18.2	6638		5779		5476		4902		4564		4125											
			0.77	0.95	0.8	1.02	0.87	1.1	0.93	1.26	0.94	1.32	0.94	1.36										
841	5395	23	7199		6663		6421		5934		5702		5390		5078		4653							
			1.18	0.69	1.39	0.71	1.38	0.83	1.42	1.02	1.43	1.1	1.43	1.17	1.43	1.22	1.4	1.26						
939	6025	27	7728		7508		7311		6921		6666		6448		6227		5961		5259		4790			
			1.66	0.54	2.09	0.54	1.99	0.66	2	0.84	2.01	0.93	2.02	1	2.03	1.05	2.02	1.11	1.97	1.19	1.91	1.21		
1038	6655	31	8473		8300		8128		7739		7566		7350		7134		6918		6400		6097		5752	
			2.24	0.44	2.32	0.53	2.39	0.61	2.51	0.76	2.55	0.82	2.59	0.89	2.61	0.94	2.63	0.99	2.63	1.09	2.61	1.12	2.58	1.15
1136	7285	36	9275		9134		8944		8613		8424		8282		8093		7904		7479		7242		7006	
			2.94	0.37	3.02	0.44	3.12	0.52	3.25	0.65	3.31	0.72	3.35	0.76	3.39	0.82	3.42	0.87	3.45	0.97	3.46	1.01	3.45	1.04
1234	7915	41	10078		9923		9769		9461		9307		9153		8999		8845		8485		8279		8074	
			3.77	0.32	3.87	0.39	3.97	0.45	4.12	0.57	4.19	0.62	4.24	0.67	4.29	0.72	4.33	0.77	4.4	0.86	4.42	0.9	4.43	0.94
Maximum RPM 1234					Max HP: 7.50				Outlet Area (Sq.Ft.): 5.36				Wheel Diameter (in): 24.5				Tip Speed: 6.41 x RPM				Max Motor Frame Size: 215T			

Performance certified is for installation type A: Free inlet, Free outlet. Power rating (Bhp) does not include transmission losses. Performance ratings do not include the effects of appurtenances. The sound ratings shown are loudness values in fan sones at 5 ft. (1.5 m) in a hemispherical free field calculated per AMCA Standard 301. Values shown are for installation type A: Free inlet hemispherical sone levels. FEI calculation is based on default motor calculation in accordance with ANS/AMCA Standard 208.

PRD 245-050 BELT DRIVE

RPM	Tip Speed	Max Sones	0.00"SP		0.12"SP		0.38"SP		0.50"SP		0.75"SP		0.88"SP		1.00"SP		1.25"SP		1.38"SP		1.62"SP		1.75"SP	
			CFM		CFM		CFM		CFM		CFM		CFM		CFM		CFM		CFM		CFM		CFM	
			BHP	FEI	BHP	FEI	BHP	FEI	BHP	FEI	BHP	FEI	BHP	FEI	BHP	FEI	BHP	FEI	BHP	FEI	BHP	FEI	BHP	FEI
350	2245	4.3	3408		2831																			
			0.17	1.97	0.18	1.98																		
461	2958	7.3	3693		3239		1764																	
			0.29	1.34	0.32	1.39	0.29	1.32																
572	3672	10.5	3978		3597		2529																	
			0.44	1.01	0.49	1.06	0.48	1.15																
684	4386	14.0	4263		3938		3078		2586															
			0.61	0.8	0.69	0.84	0.69	0.99	0.66	1														
795	5099	18.2	4548		4259		3547		3151															
			0.8	0.67	0.93	0.7	0.92	0.85	0.92	0.89														
906	5813	22	4833		4583		3973		3654		2895													
			1.03	0.56	1.21	0.58	1.19	0.74	1.2	0.79	1.16	0.83												
1018	6526	26	5269		5023		4500		4223		3578		3178		2717									
			1.36	0.47	1.43	0.54	1.52	0.66	1.54	0.7	1.54	0.77	1.5	0.78	1.43	0.78								
1129	7240	31	5845		5640		5163		4890		4378		4071		3764		2946							
			1.86	0.38	1.93	0.45	2.04	0.56	2.09	0.61	2.12	0.68	2.11	0.71	2.08	0.72	1.93	0.74						
1240	7953	36	6421		6234		5784		5559		5109		4885		4622		4023		3686		2749			
			2.46	0.32	2.54	0.38	2.68	0.49	2.73	0.53	2.79	0.6	2.81	0.63	2.8	0.65	2.75	0.69	2.68	0.7	2.39	0.69		
1351	8667	41	6997		6834		6425		6221		5813		5609		5364		4915		4629		4016		3649	
			3.18	0.27	3.27	0.32	3.43	0.42	3.5	0.46	3.58	0.53	3.61	0.56	3.63	0.59	3.62	0.63	3.59	0.65	3.47	0.67	3.36	0.67
Maximum RPM 1351.25					Max HP: 10.00				Outlet Area (Sq.Ft.): 5.36				Wheel Diameter (in): 24.5				Tip Speed: 6.41 x RPM				Max Motor Frame Size: 215T			

Performance certified is for installation type A: Free inlet, Free outlet. Power rating (Bhp) does not include transmission losses. Performance ratings do not include the effects of appurtenances. The sound ratings shown are loudness values in fan sones at 5 ft. (1.5 m) in a hemispherical free field calculated per AMCA Standard 301. Values shown are for installation type A: Free inlet hemispherical sone levels. FEI calculation is based on default motor calculation in accordance with ANS/AMCA Standard 208.

PRD 245-030 BELT DRIVE

RPM	Tip Speed	Max Sones	0.00"SP		0.38"SP		0.75"SP		1.12"SP		1.50"SP		2.00"SP		2.38"SP		2.75"SP		3.12"SP		3.50"SP		3.88"SP	
			CFM		CFM		CFM		CFM		CFM		CFM		CFM		CFM		CFM		CFM		CFM	
			BHP	FEI	BHP	FEI	BHP	FEI	BHP	FEI	BHP	FEI	BHP	FEI	BHP	FEI	BHP	FEI	BHP	FEI	BHP	FEI	BHP	FEI
350	2245	3.6	1093																					
			0.03	2.38																				
509	3266	7.5	1608		824																			
			0.11	1.53	0.11	1.63																		
668	4287	11.6	2124		1588																			
			0.26	0.97	0.27	1.29																		
828	5309	16.9	2636		2226		1760																	
			0.49	0.66	0.51	0.99	0.53	1.12																
987	6330	22	3156		2818		2452		2034		1480													
			0.83	0.49	0.84	0.75	0.89	0.92	0.91	1	0.87	0.99												
1146	7351	27	3719		3348		3042		2713		2383		1770											
			1.23	0.39	1.3	0.59	1.36	0.74	1.41	0.85	1.44	0.92	1.38	0.93										
1305	8373	33	4164		3885		3636		3373		3105		2701		2351		1870							
			1.8	0.3	1.97	0.46	1.98	0.61	2.02	0.73	2.06	0.82	2.08	0.9	2.05	0.92	1.95	0.9						
1465	9394	40	4610		4424		4198		3974		3738		3437		3163		2861		2530		2110			
			2.5	0.24	2.91	0.34	2.8	0.5	2.82	0.62	2.85	0.71	2.89	0.8	2.9	0.86	2.9	0.89	2.85	0.91	2.73	0.89		
1624	10415	49	5086		4926		4700		4507		4314		4025		3800		3543		3285		2996		2674	
			3.38	0.2	3.44	0.31	3.52	0.45	3.59	0.55	3.66	0.63	3.73	0.73	3.78	0.78	3.81	0.83	3.81	0.86	3.79	0.88	3.72	0.89
1783	11436	57	5585		5444		5267		5055		4879		4632		4420		4243		4031		3784		3537	
			4.48	0.16	4.54	0.26	4.62	0.36	4.71	0.47	4.78	0.55	4.88	0.64	4.94	0.7	4.99	0.74	5.03	0.79	5.05	0.82	5.05	0.85
Maximum RPM 1783					Max HP: 7.50				Outlet Area (Sq.Ft.): 5.36				Wheel Diameter (in): 24.5				Tip Speed: 6.41 x RPM				Max Motor Frame Size: 215T			

Performance certified is for installation type A: Free inlet, Free outlet. Power rating (Bhp) does not include transmission losses. Performance ratings do not include the effects of appurtenances. The sound ratings shown are loudness values in fan sones at 5 ft. (1.5 m) in a hemispherical free field calculated per AMCA Standard 301. Values shown are for installation type A: Free inlet hemispherical sone levels. FEI calculation is based on default motor calculation in accordance with ANS/AMCA Standard 208.

PRD 270-100 BELT DRIVE

RPM	Tip Speed	Max Sones	0.00"SP		0.12"SP		0.25"SP		0.38"SP		0.50"SP		0.75"SP		0.88"SP		1.00"SP		1.12"SP		1.25"SP		1.38"SP	
			CFM		CFM		CFM		CFM		CFM		CFM		CFM		CFM		CFM		CFM		CFM	
			BHP	FEI	BHP	FEI	BHP	FEI	BHP	FEI	BHP	FEI	BHP	FEI	BHP	FEI	BHP	FEI	BHP	FEI	BHP	FEI	BHP	FEI
318	2245	5.1	3722		2976																			
			0.12	2.65	0.13	2.6																		
405	2862	8.1	4796		4225		3477																	
			0.25	1.86	0.27	2.04	0.28	2.01																
492	3479	11.4	5870		5384		4872		4204															
			0.46	1.34	0.46	1.58	0.49	1.66	0.5	1.68														
579	4096	14.7	6944		6525		6100		5635		5062													
			0.75	1	0.72	1.25	0.77	1.34	0.8	1.43	0.81	1.47												
667	4712	18.4	8019		7642		7272		6902		6490		5336											
			1.16	0.77	1.05	1.01	1.14	1.1	1.19	1.19	1.22	1.26	1.23	1.33										
754	5329	22	9171		8844		8554		8227		7907		7141		6601		5916							
			1.66	0.63	1.6	0.8	1.69	0.89	1.75	0.99	1.79	1.06	1.83	1.19	1.83	1.23	1.79	1.24						
841	5946	27	10337		10075		9806		9540		9222		8590		8221		7801		7222		6482			
			2.3	0.51	2.01	0.7	2.23	0.77	2.34	0.84	2.42	0.93	2.51	1.05	2.54	1.1	2.55	1.14	2.53	1.17	2.45	1.17		
928	6563	31	11444		11267		11032		10797		10561		9973		9679		9385		9032		8620		8149	
			3.1	0.42	3.16	0.5	3.24	0.6	3.3	0.68	3.36	0.75	3.46	0.9	3.49	0.95	3.51	1	3.52	1.05	3.51	1.08	3.49	1.11
1016	7180	36	12520		12326		12133		11940		11683		11232		10975		10717		10460		10138		9816	
			4.06	0.36	4.14	0.44	4.22	0.51	4.28	0.58	4.36	0.66	4.47	0.78	4.52	0.83	4.55	0.88	4.58	0.93	4.6	0.97	4.61	1.01
1103	7797	41	13595		13455		13246		13036		12826		12407		12197		11987		11778		11498		11219	
			5.2	0.3	5.27	0.36	5.37	0.44	5.46	0.51	5.54	0.57	5.67	0.69	5.72	0.74	5.77	0.78	5.81	0.82	5.85	0.87	5.88	0.91
Maximum RPM 1103					Max HP: 10.00				Outlet Area (Sq.Ft.): 6.55				Wheel Diameter (in): 27				Tip Speed: 7.07 x RPM				Max Motor Frame Size: 215T			

Performance certified is for installation type A: Free inlet, Free outlet. Power rating (Bhp) does not include transmission losses. Performance ratings do not include the effects of appurtenances. The sound ratings shown are loudness values in fan sones at 5 ft. (1.5 m) in a hemispherical free field calculated per AMCA Standard 301. Values shown are for installation type A: Free inlet hemispherical sone levels. FEI calculation is based on default motor calculation in accordance with ANS/AMCA Standard 208.

PRD 270-080 BELT DRIVE

RPM	Tip Speed	Max Sones	0.00"SP		0.12"SP		0.25"SP		0.50"SP		0.62"SP		0.75"SP		0.88"SP		1.00"SP		1.25"SP		1.38"SP		1.50"SP	
			CFM		CFM		CFM		CFM		CFM		CFM		CFM		CFM		CFM		CFM		CFM	
			BHP	FEI	BHP	FEI	BHP	FEI	BHP	FEI	BHP	FEI	BHP	FEI	BHP	FEI	BHP	FEI	BHP	FEI	BHP	FEI	BHP	FEI
350	2474	6.1	3861		3163																			
			0.13	2.57	0.17	2.33																		
440	3109	9.3	5024		4268		3696																	
			0.25	1.94	0.31	1.83	0.32	1.87																
530	3743	12.8	6188		5325		4907		3643															
			0.44	1.45	0.51	1.44	0.54	1.52	0.54	1.58														
619	4378	16.4	7352		6374		5999		5168		4639													
			0.72	1.1	0.77	1.16	0.83	1.24	0.89	1.39	0.88	1.43												
709	5012	20	8352		7474		7139		6494		6147		5712		5149									
			1.12	0.83	1.29	0.84	1.32	0.95	1.37	1.14	1.38	1.21	1.38	1.27	1.35	1.3								
799	5647	25	9000		8512		8221		7709		7415		7067		6717		6319		5105					
			1.66	0.62	1.99	0.63	1.95	0.76	1.98	0.93	2	1.01	2.01	1.09	2	1.15	1.99	1.2	1.86	1.23				
889	6282	29	9713		9515		9268		8773		8525		8228		7980		7683		6940		6445		5801	
			2.29	0.49	2.37	0.57	2.46	0.66	2.59	0.82	2.63	0.89	2.66	0.96	2.68	1.01	2.69	1.07	2.67	1.15	2.62	1.18	2.53	1.18
978	6916	34	10695		10477		10259		9822		9604		9386		9168		8896		8350		8023		7696	
			3.05	0.41	3.16	0.49	3.26	0.57	3.41	0.71	3.47	0.77	3.51	0.83	3.54	0.88	3.57	0.94	3.59	1.03	3.59	1.07	3.56	1.1
1068	7551	39	11676		11497		11319		10902		10724		10486		10307		10069		9593		9355		9116	
			3.97	0.34	4.08	0.41	4.18	0.48	4.37	0.61	4.44	0.66	4.51	0.73	4.55	0.77	4.6	0.82	4.66	0.92	4.67	0.95	4.68	0.99
1158	8185	45	12657		12528		12335		11948		11754		11560		11367		11173		10786		10592		10334	
			5.06	0.29	5.16	0.34	5.29	0.41	5.51	0.53	5.6	0.59	5.68	0.64	5.74	0.69	5.8	0.73	5.89	0.81	5.91	0.85	5.94	0.89
Maximum RPM 1158					Max HP: 10.00				Outlet Area (Sq.Ft.): 6.55				Wheel Diameter (in): 27				Tip Speed: 7.07 x RPM				Max Motor Frame Size: 215T			

Performance certified is for installation type A: Free inlet, Free outlet. Power rating (Bhp) does not include transmission losses. Performance ratings do not include the effects of appurtenances. The sound ratings shown are loudness values in fan sones at 5 ft. (1.5 m) in a hemispherical free field calculated per AMCA Standard 301. Values shown are for installation type A: Free inlet hemispherical sone levels. FEI calculation is based on default motor calculation in accordance with ANS/AMCA Standard 208.

PRD 270-050 BELT DRIVE

RPM	Tip Speed	Max Sones	0.00"SP		0.25"SP		0.38"SP		0.62"SP		0.75"SP		1.00"SP		1.25"SP		1.38"SP		1.62"SP		1.75"SP		2.00"SP	
			CFM		CFM		CFM		CFM		CFM		CFM		CFM		CFM		CFM		CFM		CFM	
			BHP	FEI	BHP	FEI	BHP	FEI	BHP	FEI	BHP	FEI	BHP	FEI	BHP	FEI	BHP	FEI	BHP	FEI	BHP	FEI	BHP	FEI
318	2245	4.4	4139		2376																			
			0.2	1.98	0.23	1.76																		
423	2992	7.7	4501		3188		2207																	
			0.36	1.31	0.4	1.38	0.37	1.3																
529	3739	11.1	4864		3808		3154																	
			0.55	0.98	0.62	1.1	0.6	1.12																
635	4485	14.9	5226		4358		3838																	
			0.77	0.77	0.88	0.9	0.87	0.95																
740	5232	19.0	5588		4835		4423		3419															
			1.02	0.64	1.17	0.76	1.18	0.82	1.14	0.88														
846	5979	24	5951		5312		4955		4147		3684													
			1.31	0.54	1.52	0.65	1.53	0.71	1.53	0.79	1.5	0.81												
951	6726	29	6594		6017		5671		5017		4632		3708											
			1.81	0.44	1.96	0.57	2.01	0.62	2.06	0.7	2.06	0.73	1.96	0.76										
1057	7473	34	7327		6814		6514		5916		5616		4932		4034		3479							
			2.48	0.36	2.65	0.47	2.72	0.53	2.81	0.61	2.82	0.64	2.81	0.69	2.67	0.71	2.52	0.71						
1163	8219	39	8059		7588		7306		6789		6554		5943		5284		4908		4014					
			3.3	0.3	3.49	0.4	3.58	0.45	3.7	0.53	3.73	0.56	3.76	0.62	3.72	0.66	3.66	0.67	3.42	0.68				
1268	8966	45	8791		8381		8124		7662		7406		6893		6380		6072		5405		5046		4071	
			4.28	0.25	4.49	0.34	4.6	0.39	4.74	0.46	4.8	0.5	4.87	0.56	4.88	0.6	4.86	0.62	4.76	0.65	4.67	0.65	4.31	0.65
Maximum RPM 1268.45					Max HP: 10.00				Outlet Area (Sq.Ft.): 6.55				Wheel Diameter (in): 27				Tip Speed: 7.07 x RPM				Max Motor Frame Size: 215T			

Performance certified is for installation type A: Free inlet, Free outlet. Power rating (Bhp) does not include transmission losses. Performance ratings do not include the effects of appurtenances. The sound ratings shown are loudness values in fan sones at 5 ft. (1.5 m) in a hemispherical free field calculated per AMCA Standard 301. Values shown are for installation type A: Free inlet hemispherical sone levels. FEI calculation is based on default motor calculation in accordance with ANS/AMCA Standard 208.

PRD 270-030 BELT DRIVE

RPM	Tip Speed	Max Sones	0.00"SP		0.38"SP		0.75"SP		1.12"SP		1.50"SP		2.00"SP		2.38"SP		2.75"SP		3.12"SP		3.50"SP		3.88"SP	
			CFM		CFM		CFM		CFM		CFM		CFM		CFM		CFM		CFM		CFM		CFM	
			BHP	FEI	BHP	FEI	BHP	FEI	BHP	FEI	BHP	FEI	BHP	FEI	BHP	FEI	BHP	FEI	BHP	FEI	BHP	FEI	BHP	FEI
350	2474	4.5	1467																					
			0.06	2.26																				
483	3412	8.2	2042		1160																			
			0.15	1.42	0.16	1.57																		
615	4350	12.2	2617		1973																			
			0.33	0.93	0.35	1.25																		
748	5287	16.7	3188		2692		2109																	
			0.59	0.66	0.61	0.97	0.64	1.1																
881	6225	22	3762		3349		2909		2384		1649													
			0.96	0.49	0.98	0.76	1.03	0.92	1.06	0.99	0.99	0.96												
1013	7163	27	4395		3912		3523		3131		2656		1679											
			1.39	0.4	1.38	0.64	1.48	0.78	1.54	0.88	1.56	0.93	1.4	0.88										
1146	8101	33	4913		4568		4208		3896		3549		3011		2507									
			1.99	0.31	2.15	0.47	2.18	0.64	2.23	0.75	2.28	0.83	2.29	0.9	2.23	0.91								
1279	9038	39	5410		5147		4872		4571		4293		3869		3515		3127		2636					
			2.72	0.25	3.09	0.38	3.02	0.52	3.06	0.65	3.1	0.73	3.14	0.83	3.15	0.87	3.12	0.9	3.02	0.89				
1411	9976	46	5917		5693		5431		5169		4907		4570		4271		3934		3597		3186		2662	
			3.61	0.21	3.69	0.34	3.77	0.48	3.86	0.58	3.93	0.67	4.01	0.76	4.05	0.81	4.07	0.85	4.06	0.88	3.99	0.88	3.81	0.86
1544	10914	54	6473		6269		6064		5818		5573		5245		5000		4713		4427		4140		3813	
			4.73	0.17	4.81	0.29	4.89	0.39	4.99	0.49	5.08	0.58	5.18	0.68	5.25	0.73	5.3	0.78	5.33	0.82	5.33	0.84	5.29	0.86
Maximum RPM 1544					Max HP: 10.00				Outlet Area (Sq.Ft.): 6.55				Wheel Diameter (in): 27				Tip Speed: 7.07 x RPM				Max Motor Frame Size: 215T			

Performance certified is for installation type A: Free inlet, Free outlet. Power rating (Bhp) does not include transmission losses. Performance ratings do not include the effects of appurtenances. The sound ratings shown are loudness values in fan sones at 5 ft. (1.5 m) in a hemispherical free field calculated per AMCA Standard 301. Values shown are for installation type A: Free inlet hemispherical sone levels. FEI calculation is based on default motor calculation in accordance with ANS/AMCA Standard 208.

PRD 300-100 BELT DRIVE

RPM	Tip Speed	Max Sones	0.00"SP		0.12"SP		0.25"SP		0.38"SP		0.50"SP		0.75"SP		0.88"SP		1.00"SP		1.12"SP		1.25"SP		1.38"SP	
			CFM		CFM		CFM		CFM		CFM		CFM		CFM		CFM		CFM		CFM		CFM	
			BHP	FEI	BHP	FEI	BHP	FEI	BHP	FEI	BHP	FEI	BHP	FEI	BHP	FEI	BHP	FEI	BHP	FEI	BHP	FEI	BHP	FEI
286	2245	5.2	4595		3674																			
			0.15	2.69	0.17	2.62																		
369	2894	8.2	5991		5307		4404																	
			0.32	1.83	0.34	2.01	0.36	1.99																
451	3544	11.9	7387		6810		6205		5402															
			0.6	1.29	0.59	1.53	0.63	1.62	0.65	1.65														
534	4193	15.8	8783		8250		7757		7215		6536													
			1	0.95	0.95	1.2	1.02	1.3	1.06	1.38	1.08	1.43												
617	4843	19.7	10185		9768		9339		8887		8449		7196		6137									
			1.55	0.73	1.58	0.87	1.63	1	1.66	1.1	1.69	1.19	1.7	1.29	1.64	1.28								
699	5492	24	11702		11347		10977		10617		10204		9273		8694		7994		6807					
			2.24	0.59	2.1	0.76	2.25	0.85	2.33	0.93	2.4	1.02	2.47	1.15	2.48	1.19	2.45	1.21	2.33	1.19				
782	6141	29	13218		12880		12608		12268		11928		11181		10706		10230		9687		8940		7785	
			3.14	0.48	2.7	0.68	2.97	0.73	3.15	0.8	3.26	0.88	3.4	1	3.44	1.06	3.46	1.1	3.46	1.13	3.41	1.15	3.26	1.14
865	6791	34	14619		14393		14093		13867		13567		12890		12589		12214		11838		11387		10861	
			4.24	0.39	4.33	0.47	4.43	0.57	4.49	0.63	4.57	0.71	4.71	0.85	4.75	0.9	4.78	0.95	4.81	0.99	4.81	1.03	4.8	1.07
947	7440	40	16017		15852		15605		15276		15029		14535		14205		13876		13546		13217		12888	
			5.58	0.33	5.66	0.38	5.76	0.46	5.88	0.55	5.97	0.61	6.1	0.72	6.17	0.78	6.23	0.84	6.27	0.88	6.31	0.92	6.32	0.96
1030	8090	45	17415		17236		16967		16788		16519		16072		15803		15535		15266		14997		14639	
			7.17	0.28	7.27	0.34	7.4	0.41	7.49	0.46	7.6	0.53	7.76	0.63	7.84	0.68	7.91	0.73	7.97	0.77	8.02	0.81	8.08	0.86
Maximum RPM 1030					Max HP: 10.00				Outlet Area (Sq.Ft.): 8.03				Wheel Diameter (in): 30				Tip Speed: 7.85 x RPM				Max Motor Frame Size: 215T			

Performance certified is for installation type A: Free inlet, Free outlet. Power rating (Bhp) does not include transmission losses. Performance ratings do not include the effects of appurtenances. The sound ratings shown are loudness values in fan sones at 5 ft. (1.5 m) in a hemispherical free field calculated per AMCA Standard 301. Values shown are for installation type A: Free inlet hemispherical sone levels. FEI calculation is based on default motor calculation in accordance with ANS/AMCA Standard 208.

PRD 300-080 BELT DRIVE

RPM	Tip Speed	Max Sones	0.00"SP		0.12"SP		0.25"SP		0.50"SP		0.62"SP		0.75"SP		0.88"SP		1.00"SP		1.25"SP		1.38"SP		1.50"SP	
			CFM		CFM		CFM		CFM		CFM		CFM		CFM		CFM		CFM		CFM		CFM	
			BHP	FEI	BHP	FEI	BHP	FEI	BHP	FEI	BHP	FEI	BHP	FEI	BHP	FEI	BHP	FEI	BHP	FEI	BHP	FEI	BHP	FEI
350	2749	7.4	5388		4517		3530																	
			0.22	2.3	0.27	2.11	0.28	2.05																
431	3388	11.0	6835		5846		5230																	
			0.4	1.7	0.48	1.64	0.51	1.7																
513	4026	14.8	8281		7154		6644		5437		4203													
			0.68	1.27	0.76	1.3	0.82	1.38	0.85	1.5	0.79	1.45												
594	4665	18.6	9727		8484		7990		7097		6551		5807											
			1.08	0.97	1.13	1.04	1.23	1.13	1.31	1.29	1.32	1.34	1.31	1.36										
675	5304	23	10679		9822		9459		8683		8283		7882		7366		6685							
			1.68	0.71	1.95	0.72	1.96	0.84	2.01	1.04	2.03	1.12	2.04	1.18	2.02	1.23	1.98	1.26						
757	5943	27	11484		11105		10809		10167		9852		9465		9073		8680		7584		6771			
			2.4	0.54	2.98	0.54	2.85	0.66	2.87	0.85	2.89	0.93	2.91	1.01	2.91	1.07	2.9	1.12	2.81	1.19	2.7	1.2		
838	6582	33	12565		12308		12052		11476		11155		10835		10515		10195		9426		8978		8401	
			3.25	0.44	3.37	0.53	3.47	0.6	3.64	0.76	3.71	0.83	3.76	0.89	3.8	0.95	3.82	1	3.81	1.09	3.79	1.12	3.73	1.15
919	7220	38	13784		13573		13292		12800		12519		12238		11957		11676		11044		10692		10341	
			4.29	0.37	4.41	0.44	4.55	0.52	4.74	0.65	4.83	0.71	4.9	0.77	4.96	0.83	5	0.88	5.04	0.97	5.05	1.01	5.04	1.04
1001	7859	43	15004		14774		14545		14086		13856		13627		13397		13091		12556		12327		12021	
			5.53	0.31	5.68	0.38	5.82	0.45	6.05	0.57	6.15	0.62	6.23	0.67	6.3	0.72	6.37	0.77	6.46	0.86	6.49	0.89	6.5	0.93
1082	8498	49	16223		16058		15810		15396		15148		14983		14734		14486		13990		13742		13494	
			6.99	0.27	7.12	0.32	7.3	0.38	7.56	0.49	7.69	0.55	7.77	0.58	7.88	0.63	7.96	0.68	8.1	0.77	8.14	0.81	8.18	0.84
Maximum RPM 1082					Max HP: 10.00				Outlet Area (Sq.Ft.): 8.03				Wheel Diameter (in): 30				Tip Speed: 7.85 x RPM				Max Motor Frame Size: 215T			

Performance certified is for installation type A: Free inlet, Free outlet. Power rating (Bhp) does not include transmission losses. Performance ratings do not include the effects of appurtenances. The sound ratings shown are loudness values in fan sones at 5 ft. (1.5 m) in a hemispherical free field calculated per AMCA Standard 301. Values shown are for installation type A: Free inlet hemispherical sone levels. FEI calculation is based on default motor calculation in accordance with ANS/AMCA Standard 208.

PRD 300-050 BELT DRIVE

RPM	Tip Speed	Max Sones	0.00"SP		0.25"SP		0.38"SP		0.62"SP		0.75"SP		1.00"SP		1.25"SP		1.38"SP		1.62"SP		1.75"SP		2.00"SP	
			CFM		CFM		CFM		CFM		CFM		CFM		CFM		CFM		CFM		CFM		CFM	
			BHP	FEI	BHP	FEI	BHP	FEI	BHP	FEI	BHP	FEI	BHP	FEI	BHP	FEI	BHP	FEI	BHP	FEI	BHP	FEI	BHP	FEI
286	2245	4.5	5110		2933																			
			0.25	1.99	0.28	1.75																		
386	3029	7.8	5580		3988		2807																	
			0.46	1.28	0.51	1.36	0.47	1.28																
486	3813	11.7	6049		4776		3967																	
			0.71	0.94	0.79	1.07	0.78	1.09																
585	4598	16.0	6519		5477		4835		3252															
			1	0.74	1.13	0.87	1.13	0.92	1.02	0.93														
685	5382	20	6989		6087		5579		4415		3674													
			1.33	0.6	1.53	0.73	1.54	0.79	1.5	0.85	1.42	0.85												
785	6166	26	7464		6636		6201		5242		4676													
			1.72	0.51	1.89	0.65	1.94	0.7	1.96	0.77	1.92	0.79												
885	6950	31	8413		7726		7333		6547		6106		5075											
			2.46	0.4	2.65	0.53	2.73	0.58	2.8	0.66	2.81	0.7	2.72	0.73										
985	7735	37	9362		8707		8379		7723		7341		6521		5593		4992							
			3.39	0.33	3.63	0.45	3.71	0.5	3.83	0.57	3.86	0.61	3.86	0.66	3.74	0.69	3.61	0.69						
1085	8519	43	10312		9770		9469		8807		8506		7844		7062		6641		5678		5137			
			4.53	0.27	4.78	0.37	4.89	0.42	5.06	0.5	5.11	0.53	5.17	0.59	5.14	0.63	5.09	0.65	4.88	0.66	4.7	0.66		
1184	9303	49	11261		10735		10472		9947		9618		9027		8369		8041		7318		6924		6004	
			5.9	0.23	6.19	0.32	6.31	0.36	6.5	0.43	6.59	0.47	6.7	0.52	6.74	0.57	6.73	0.59	6.64	0.62	6.56	0.63	6.28	0.64
Maximum RPM 1184.5					Max HP: 10.00				Outlet Area (Sq.Ft.): 8.03				Wheel Diameter (in): 30				Tip Speed: 7.85 x RPM				Max Motor Frame Size: 215T			

Performance certified is for installation type A: Free inlet, Free outlet. Power rating (Bhp) does not include transmission losses. Performance ratings do not include the effects of appurtenances. The sound ratings shown are loudness values in fan sones at 5 ft. (1.5 m) in a hemispherical free field calculated per AMCA Standard 301. Values shown are for installation type A: Free inlet hemispherical sone levels. FEI calculation is based on default motor calculation in accordance with ANS/AMCA Standard 208.

PRD 300-030 BELT DRIVE

RPM	Tip Speed	Max Sones	0.00"SP		0.38"SP		0.75"SP		1.12"SP		1.50"SP		2.00"SP		2.38"SP		2.75"SP		3.12"SP		3.50"SP		3.88"SP	
			CFM		CFM		CFM		CFM		CFM		CFM		CFM		CFM		CFM		CFM		CFM	
			BHP	FEI	BHP	FEI	BHP	FEI	BHP	FEI	BHP	FEI	BHP	FEI	BHP	FEI	BHP	FEI	BHP	FEI	BHP	FEI	BHP	FEI
350	2749	5.6	2020																					
			0.1	1.98																				
471	3702	9.6	2741		1778																			
			0.24	1.23	0.26	1.45																		
593	4655	14.0	3462		2717		1776																	
			0.5	0.81	0.52	1.14	0.5	1.18																
714	5608	18.8	4176		3601		2942		2072															
			0.87	0.58	0.87	0.89	0.93	1.03	0.9	1.03														
835	6561	25	4924		4395		3861		3280		2546													
			1.36	0.44	1.38	0.7	1.46	0.86	1.51	0.94	1.48	0.95												
957	7514	30	5682		5166		4702		4233		3763		2933											
			1.97	0.35	2.09	0.54	2.17	0.7	2.25	0.81	2.29	0.88	2.24	0.9										
1078	8467	36	6305		5926		5514		5156		4750		4137		3648		2958							
			2.79	0.28	3.07	0.42	3.07	0.59	3.12	0.69	3.18	0.79	3.22	0.87	3.19	0.89	3.06	0.88						
1199	9420	43	6928		6652		6312		5975		5666		5167		4756		4347		3849		3218			
			3.78	0.23	4.4	0.33	4.24	0.48	4.26	0.6	4.3	0.68	4.36	0.78	4.39	0.84	4.38	0.87	4.32	0.88	4.15	0.86		
1321	10372	51	7595		7307		7019		6731		6443		6010		5674		5290		4906		4474		3945	
			5.01	0.19	5.11	0.32	5.22	0.44	5.32	0.53	5.41	0.62	5.53	0.71	5.6	0.77	5.64	0.81	5.65	0.84	5.61	0.86	5.49	0.86
1442	11325	59	8293		8031		7769		7506		7244		6825		6563		6248		5933		5566		5199	
			6.52	0.16	6.64	0.27	6.75	0.37	6.86	0.46	6.97	0.54	7.12	0.64	7.2	0.69	7.27	0.74	7.33	0.78	7.36	0.81	7.35	0.83
Maximum RPM 1442					Max HP: 10.00				Outlet Area (Sq.Ft.): 8.03				Wheel Diameter (in): 30				Tip Speed: 7.85 x RPM				Max Motor Frame Size: 215T			

Performance certified is for installation type A: Free inlet, Free outlet. Power rating (Bhp) does not include transmission losses. Performance ratings do not include the effects of appurtenances. The sound ratings shown are loudness values in fan sones at 5 ft. (1.5 m) in a hemispherical free field calculated per AMCA Standard 301. Values shown are for installation type A: Free inlet hemispherical sone levels. FEI calculation is based on default motor calculation in accordance with ANS/AMCA Standard 208.

PRD 330-100 BELT DRIVE

RPM	Tip Speed	Max Sones	0.00"SP		0.12"SP		0.25"SP		0.38"SP		0.50"SP		0.75"SP		0.88"SP		1.00"SP		1.12"SP		1.25"SP		1.38"SP	
			CFM		CFM		CFM		CFM		CFM		CFM		CFM		CFM		CFM		CFM		CFM	
			BHP	FEI	BHP	FEI	BHP	FEI	BHP	FEI	BHP	FEI	BHP	FEI	BHP	FEI	BHP	FEI	BHP	FEI	BHP	FEI	BHP	FEI
260	2245	5.3	5560		4445																			
			0.18	2.72	0.2	2.65																		
336	2900	8.3	7264		6434		5339																	
			0.39	1.82	0.41	2.01	0.43	1.99																
412	3555	12.3	8968		8267		7533		6558															
			0.73	1.28	0.72	1.53	0.77	1.61	0.8	1.64														
487	4210	16.0	10673		10024		9424		8766		7996													
			1.23	0.94	1.16	1.19	1.25	1.29	1.3	1.37	1.32	1.42												
563	4865	20	12389		11881		11360		10869		10276		8809		7586									
			1.9	0.72	1.94	0.86	1.99	0.99	2.03	1.09	2.07	1.18	2.09	1.28	2.02	1.28								
639	5521	25	14240		13808		13358		12920		12417		11354		10647		9795		8424					
			2.75	0.58	2.57	0.75	2.76	0.84	2.86	0.93	2.94	1.01	3.03	1.14	3.05	1.18	3.02	1.21	2.89	1.19				
715	6176	29	16087		15756		15425		15012		14598		13771		13192		12696		12034		11207		10049	
			3.86	0.47	3.96	0.57	4.05	0.66	4.15	0.75	4.22	0.84	4.33	0.96	4.37	1.03	4.38	1.07	4.37	1.11	4.32	1.14	4.19	1.14
791	6831	35	17793		17519		17153		16878		16513		15781		15323		14866		14408		13860		13311	
			5.23	0.39	5.33	0.46	5.45	0.56	5.54	0.62	5.63	0.7	5.78	0.83	5.85	0.89	5.89	0.94	5.92	0.99	5.93	1.03	5.92	1.06
867	7486	42	19500		19299		18999		18698		18297		17695		17294		16993		16592		16191		15690	
			6.88	0.32	6.97	0.38	7.1	0.45	7.22	0.52	7.35	0.61	7.52	0.72	7.61	0.78	7.66	0.82	7.72	0.87	7.76	0.91	7.79	0.95
942	8141	48	21206		20988		20770		20443		20116		19571		19244		18917		18590		18262		17935	
			8.85	0.27	8.97	0.33	9.08	0.38	9.23	0.46	9.37	0.52	9.57	0.62	9.67	0.68	9.76	0.72	9.83	0.77	9.9	0.81	9.95	0.84
Maximum RPM 942.337					Max HP: 10.00				Outlet Area (Sq.Ft.): 9.69				Wheel Diameter (in): 33				Tip Speed: 8.64 x RPM				Max Motor Frame Size: 215T			

Performance certified is for installation type A: Free inlet, Free outlet. Power rating (Bhp) does not include transmission losses. Performance ratings do not include the effects of appurtenances. The sound ratings shown are loudness values in fan sones at 5 ft. (1.5 m) in a hemispherical free field calculated per AMCA Standard 301. Values shown are for installation type A: Free inlet hemispherical sone levels. FEI calculation is based on default motor calculation in accordance with ANS/AMCA Standard 208.

PRD 330-080 BELT DRIVE

RPM	Tip Speed	Max Sones	0.00"SP		0.25"SP		0.50"SP		0.88"SP		1.12"SP		1.38"SP		1.62"SP		1.88"SP		2.25"SP		2.50"SP		2.75"SP	
			CFM		CFM		CFM		CFM		CFM		CFM		CFM		CFM		CFM		CFM		CFM	
			BHP	FEI	BHP	FEI	BHP	FEI	BHP	FEI	BHP	FEI	BHP	FEI	BHP	FEI	BHP	FEI	BHP	FEI	BHP	FEI	BHP	FEI
350	3024	8.9	7638		5566																			
			0.37	2.03	0.48	1.9																		
421	3637	12.7	9606		7595		5513																	
			0.67	1.48	0.82	1.53	0.83	1.57																
492	4251	16.6	11574		9451		8151																	
			1.12	1.1	1.3	1.23	1.39	1.38																
563	4864	20	13445		11513		10524		8460															
			1.83	0.8	2.15	0.94	2.23	1.12	2.22	1.28														
634	5477	24	15109		14018		13115		11606		10277													
			2.92	0.58	3.44	0.71	3.5	0.9	3.55	1.11	3.48	1.19												
705	6091	29	16786		16015		15245		13962		12935		11651		9683									
			4.18	0.45	4.49	0.63	4.71	0.78	4.89	0.97	4.92	1.07	4.84	1.14	4.55	1.15								
776	6704	34	18476		17817		17063		15933		15179		14237		13013		11506							
			5.57	0.37	5.91	0.52	6.2	0.67	6.46	0.84	6.54	0.93	6.56	1.02	6.48	1.09	6.25	1.11						
847	7318	40	20166		19550		18933		17905		17185		16465		15540		14512		12353					
			7.25	0.32	7.63	0.45	7.93	0.57	8.28	0.73	8.43	0.83	8.51	0.9	8.53	0.98	8.46	1.04	8.08	1.08				
918	7931	46	21857		21300		20743		19740		19183		18514		17734		16954		15506		14280		12609	
			9.22	0.27	9.64	0.39	9.98	0.49	10.44	0.65	10.61	0.73	10.75	0.81	10.84	0.88	10.86	0.94	10.74	1.02	10.52	1.05	10.05	1.05
989	8544	51	23547		23067		22467		21627		21026		20426		19826		19226		18025		17185		16225	
			11.53	0.23	11.96	0.33	12.41	0.44	12.89	0.57	13.14	0.65	13.33	0.73	13.47	0.79	13.55	0.85	13.57	0.93	13.5	0.98	13.35	1.01
Maximum RPM 989					Max HP: 10.00				Outlet Area (Sq.Ft.): 9.69				Wheel Diameter (in): 33				Tip Speed: 8.64 x RPM				Max Motor Frame Size: 215T			

Performance certified is for installation type A: Free inlet, Free outlet. Power rating (Bhp) does not include transmission losses. Performance ratings do not include the effects of appurtenances. The sound ratings shown are loudness values in fan sones at 5 ft. (1.5 m) in a hemispherical free field calculated per AMCA Standard 301. Values shown are for installation type A: Free inlet hemispherical sone levels. FEI calculation is based on default motor calculation in accordance with ANS/AMCA Standard 208.

PRD 330-050 BELT DRIVE

RPM	Tip Speed	Max Sones	0.00"SP		0.25"SP		0.38"SP		0.62"SP		0.75"SP		1.00"SP		1.25"SP		1.38"SP		1.62"SP		1.75"SP		2.00"SP	
			CFM		CFM		CFM		CFM		CFM		CFM		CFM		CFM		CFM		CFM		CFM	
			BHP	FEI	BHP	FEI	BHP	FEI	BHP	FEI	BHP	FEI	BHP	FEI	BHP	FEI	BHP	FEI	BHP	FEI	BHP	FEI	BHP	FEI
260	2245	4.6	6183		3549																			
			0.3	1.99	0.34	1.75																		
351	3036	7.9	6756		4830		3400																	
			0.56	1.27	0.62	1.34	0.57	1.26																
443	3827	12.1	7329		5788		4808																	
			0.86	0.93	0.97	1.06	0.94	1.08																
534	4617	16.6	7902		6641		5904		3992															
			1.22	0.73	1.38	0.86	1.38	0.91	1.25	0.92														
626	5408	21	8476		7383		6808		5407		4511													
			1.63	0.59	1.87	0.72	1.88	0.77	1.84	0.84	1.75	0.83												
718	6199	26	9079		8126		7596		6430		5741													
			2.11	0.5	2.31	0.63	2.37	0.69	2.41	0.76	2.36	0.78												
809	6990	32	10238		9401		8923		7967		7430		6235		4443									
			3.03	0.39	3.27	0.52	3.36	0.57	3.45	0.66	3.46	0.69	3.36	0.72	2.96	0.7								
901	7781	38	11396		10664		10265		9401		8935		8004		6874		6209							
			4.18	0.32	4.45	0.43	4.56	0.48	4.71	0.57	4.75	0.6	4.76	0.65	4.62	0.68	4.48	0.68						
992	8572	45	12554		11895		11529		10796		10356		9551		8671		8159		7060		6327			
			5.59	0.26	5.89	0.36	6.02	0.41	6.22	0.49	6.3	0.52	6.37	0.58	6.35	0.62	6.29	0.64	6.05	0.65	5.82	0.65		
1084	9362	52	13713		13072		12752		12112		11712		11072		10272		9872		8991		8511		7391	
			7.28	0.22	7.64	0.31	7.78	0.35	8.02	0.42	8.13	0.46	8.25	0.51	8.31	0.56	8.3	0.58	8.21	0.61	8.11	0.62	7.77	0.63
Maximum RPM 1083.68755					Max HP: 10.00				Outlet Area (Sq.Ft.): 9.69				Wheel Diameter (in): 33				Tip Speed: 8.64 x RPM				Max Motor Frame Size: 215T			

Performance certified is for installation type A: Free inlet, Free outlet. Power rating (Bhp) does not include transmission losses. Performance ratings do not include the effects of appurtenances. The sound ratings shown are loudness values in fan sones at 5 ft. (1.5 m) in a hemispherical free field calculated per AMCA Standard 301. Values shown are for installation type A: Free inlet hemispherical sone levels. FEI calculation is based on default motor calculation in accordance with ANS/AMCA Standard 208.

PRD 330-030 BELT DRIVE

RPM	Tip Speed	Max Sones	0.00"SP		0.38"SP		0.75"SP		1.12"SP		1.50"SP		2.00"SP		2.38"SP		2.75"SP		3.12"SP		3.50"SP		3.88"SP	
			CFM		CFM		CFM		CFM		CFM		CFM		CFM		CFM		CFM		CFM		CFM	
			BHP	FEI	BHP	FEI	BHP	FEI	BHP	FEI	BHP	FEI	BHP	FEI	BHP	FEI	BHP	FEI	BHP	FEI	BHP	FEI	BHP	FEI
350	3024	6.7	2695																					
			0.16	1.71																				
458	3954	10.9	3547		2476																			
			0.36	1.08	0.39	1.35																		
565	4884	15.6	4398		3580		2612																	
			0.7	0.74	0.74	1.04	0.75	1.13																
673	5814	20	5240		4549		3821		2861															
			1.18	0.53	1.16	0.85	1.24	0.98	1.23	1.01														
781	6744	26	6143		5453		4868		4190		3397													
			1.77	0.42	1.79	0.67	1.89	0.82	1.97	0.91	1.96	0.93												
888	7675	32	7002		6384		5859		5325		4744		3851		2782									
			2.54	0.33	2.7	0.52	2.79	0.67	2.88	0.78	2.93	0.85	2.9	0.89	2.67	0.84								
996	8605	38	7738		7286		6830		6394		5895		5191		4639		3890							
			3.53	0.27	3.92	0.41	3.9	0.56	3.96	0.67	4.03	0.77	4.08	0.85	4.06	0.88	3.94	0.87						
1104	9535	45	8475		8144		7780		7373		6942		6387		5940		5437		4827		4110			
			4.74	0.22	5.53	0.32	5.33	0.46	5.34	0.58	5.4	0.68	5.47	0.77	5.5	0.82	5.5	0.85	5.43	0.87	5.26	0.86		
1211	10465	53	9272		8979		8627		8217		7865		7338		6927		6517		6048		5520		4934	
			6.23	0.18	6.33	0.3	6.47	0.41	6.61	0.53	6.73	0.61	6.87	0.7	6.96	0.76	7.01	0.8	7.02	0.83	6.98	0.85	6.86	0.85
1319	11395	61	10097		9841		9458		9139		8820		8373		7990		7607		7224		6841		6394	
			8.04	0.15	8.15	0.25	8.32	0.37	8.46	0.46	8.59	0.53	8.75	0.62	8.87	0.68	8.97	0.73	9.03	0.77	9.06	0.8	9.06	0.82
Maximum RPM 1319					Max HP: 10.00				Outlet Area (Sq.Ft.): 9.69				Wheel Diameter (in): 33				Tip Speed: 8.64 x RPM				Max Motor Frame Size: 215T			

Performance certified is for installation type A: Free inlet, Free outlet. Power rating (Bhp) does not include transmission losses. Performance ratings do not include the effects of appurtenances. The sound ratings shown are loudness values in fan sones at 5 ft. (1.5 m) in a hemispherical free field calculated per AMCA Standard 301. Values shown are for installation type A: Free inlet hemispherical sone levels. FEI calculation is based on default motor calculation in accordance with ANS/AMCA Standard 208.

PRD 365-100 BELT DRIVE

RPM	Tip Speed	Max Sones	0.00"SP		0.12"SP		0.25"SP		0.38"SP		0.50"SP		0.75"SP		0.88"SP		1.00"SP		1.12"SP		1.25"SP		1.38"SP	
			CFM		CFM		CFM		CFM		CFM		CFM		CFM		CFM		CFM		CFM		CFM	
			BHP	FEI	BHP	FEI	BHP	FEI	BHP	FEI	BHP	FEI	BHP	FEI	BHP	FEI	BHP	FEI	BHP	FEI	BHP	FEI	BHP	FEI
235	2245	5.4	6802		5438																			
			0.22	2.75	0.25	2.67																		
296	2830	8.1	8664		7635		6193																	
			0.45	1.91	0.47	2.08	0.49	2.03																
357	3415	11.2	10526		9658		8686		7323															
			0.79	1.38	0.79	1.62	0.85	1.69	0.86	1.69														
419	4000	15.3	12388		11582		10823		9930		8779													
			1.28	1.03	1.23	1.29	1.32	1.38	1.37	1.46	1.39	1.49												
480	4585	18.9	14250		13513		12856		12124		11392		8902											
			1.94	0.8	1.79	1.04	1.93	1.13	2.02	1.22	2.07	1.29	2.04	1.33										
541	5170	23	16210		15634		15034		14460		13821		12249		11221		9509							
			2.78	0.64	2.72	0.8	2.85	0.91	2.94	1.01	3	1.09	3.07	1.22	3.05	1.24	2.9	1.22						
602	5755	27	18232		17677		17200		16731		16173		14883		14149		13231		12124		10071			
			3.82	0.53	3.49	0.72	3.76	0.79	3.91	0.87	4.03	0.95	4.18	1.08	4.22	1.13	4.21	1.17	4.14	1.18	3.88	1.15		
664	6341	31	20205		19790		19374		18959		18439		17400		16881		16258		15530		14595		13557	
			5.11	0.44	5.25	0.54	5.36	0.63	5.46	0.71	5.57	0.8	5.72	0.93	5.76	0.98	5.79	1.03	5.8	1.08	5.76	1.11	5.67	1.12
725	6926	36	22070		21729		21389		20935		20481		19573		19119		18552		17985		17417		16737	
			6.66	0.37	6.79	0.45	6.92	0.52	7.06	0.61	7.18	0.69	7.37	0.82	7.44	0.87	7.5	0.92	7.54	0.97	7.56	1.01	7.55	1.04
786	7511	42	23934		23688		23319		22950		22581		21719		21350		20858		20366		19873		19381	
			8.5	0.32	8.61	0.37	8.77	0.45	8.91	0.52	9.04	0.58	9.29	0.71	9.37	0.76	9.47	0.81	9.54	0.86	9.59	0.9	9.62	0.94
Maximum RPM 786					Max HP: 10.00				Outlet Area (Sq.Ft.): 11.88				Wheel Diameter (in): 36.5				Tip Speed: 9.56 x RPM				Max Motor Frame Size: 215T			

Performance certified is for installation type A: Free inlet, Free outlet. Power rating (Bhp) does not include transmission losses. Performance ratings do not include the effects of appurtenances. The sound ratings shown are loudness values in fan sones at 5 ft. (1.5 m) in a hemispherical free field calculated per AMCA Standard 301. Values shown are for installation type A: Free inlet hemispherical sone levels. FEI calculation is based on default motor calculation in accordance with ANS/AMCA Standard 208.

PRD 365-080 BELT DRIVE

RPM	Tip Speed	Max Sones	0.00"SP		0.25"SP		0.50"SP		0.62"SP		0.88"SP		1.12"SP		1.38"SP		1.62"SP		1.75"SP		2.00"SP		2.25"SP	
			CFM		CFM		CFM		CFM		CFM		CFM		CFM		CFM		CFM		CFM		CFM	
			BHP	FEI	BHP	FEI	BHP	FEI	BHP	FEI	BHP	FEI	BHP	FEI	BHP	FEI	BHP	FEI	BHP	FEI	BHP	FEI	BHP	FEI
350	3299	10.8	9552		7230																			
			0.53	1.78	0.68	1.75																		
403	3796	14.2	11174		8847		6742																	
			0.82	1.41	1	1.48	1.02	1.56																
456	4294	17.5	12795		10395		8878		7825															
			1.2	1.13	1.41	1.26	1.49	1.41	1.47	1.43														
508	4791	21	14417		11887		10641		9908		7342													
			1.69	0.92	1.9	1.08	2.04	1.24	2.06	1.3	1.93	1.29												
561	5288	24	15349		13579		12464		11891		10493													
			2.39	0.71	2.79	0.84	2.87	1.04	2.9	1.11	2.88	1.23												
614	5786	28	16252		15066		14147		13614		12522		11069											
			3.18	0.57	3.75	0.7	3.8	0.88	3.83	0.97	3.85	1.1	3.77	1.19										
667	6283	33	17273		16480		15600		15159		14191		13046		11461									
			4.07	0.48	4.37	0.65	4.6	0.81	4.68	0.88	4.77	1	4.78	1.1	4.66	1.16								
719	6781	36	18640		17880		17120		16644		15789		14839		13699		12178		11133					
			5.11	0.41	5.46	0.57	5.71	0.71	5.83	0.79	5.96	0.9	6.02	1	5.99	1.08	5.83	1.13	5.65	1.13				
772	7278	41	20007		19293		18579		18172		17458		16540		15622		14500		13888		12154			
			6.32	0.36	6.71	0.51	7	0.64	7.12	0.7	7.29	0.8	7.41	0.91	7.44	0.99	7.39	1.06	7.33	1.08	7.03	1.1		
825	7775	47	21375		20721		20067		19740		18978		18215		17452		16471		16035		14837		13202	
			7.71	0.31	8.12	0.45	8.44	0.57	8.57	0.62	8.81	0.73	8.97	0.82	9.05	0.9	9.07	0.98	9.06	1.01	8.93	1.06	8.62	1.08
Maximum RPM 825					Max HP: 10.00				Outlet Area (Sq.Ft.): 11.88				Wheel Diameter (in): 36.5				Tip Speed: 9.56 x RPM				Max Motor Frame Size: 215T			

Performance certified is for installation type A: Free inlet, Free outlet. Power rating (Bhp) does not include transmission losses. Performance ratings do not include the effects of appurtenances. The sound ratings shown are loudness values in fan sones at 5 ft. (1.5 m) in a hemispherical free field calculated per AMCA Standard 301. Values shown are for installation type A: Free inlet hemispherical sone levels. FEI calculation is based on default motor calculation in accordance with ANS/AMCA Standard 208.

PRD 365-050 BELT DRIVE

RPM	Tip Speed	Max Sones	0.00"SP		0.12"SP		0.38"SP		0.50"SP		0.75"SP		0.88"SP		1.00"SP		1.25"SP		1.38"SP		1.62"SP		1.75"SP	
			CFM		CFM		CFM		CFM		CFM		CFM		CFM		CFM		CFM		CFM		CFM	
			BHP	FEI	BHP	FEI	BHP	FEI	BHP	FEI	BHP	FEI	BHP	FEI	BHP	FEI	BHP	FEI	BHP	FEI	BHP	FEI	BHP	FEI
235	2245	4.7	7564		6284																			
			0.37	2	0.41	1.99																		
309	2955	7.6	8194		7141		3913																	
			0.65	1.32	0.72	1.37	0.65	1.26																
384	3665	11.2	8824		7979		5607																	
			0.97	0.98	1.09	1.03	1.06	1.11																
458	4376	15.4	9453		8731		6824		5677															
			1.35	0.78	1.54	0.81	1.52	0.95	1.46	0.96														
532	5086	19.7	10083		9442		7861		6984															
			1.78	0.64	2.06	0.67	2.04	0.82	2.02	0.85														
607	5796	24	10713		10157		8804		8097		6350													
			2.26	0.54	2.67	0.56	2.64	0.71	2.65	0.76	2.54	0.8												
681	6507	29	11658		11114		9958		9277		7849		7032		6012									
			2.99	0.45	3.14	0.52	3.34	0.63	3.39	0.68	3.38	0.74	3.31	0.75	3.14	0.74								
755	7217	34	12931		12478		11422		10818		9686		9007		8253		6442							
			4.08	0.37	4.23	0.43	4.49	0.54	4.58	0.59	4.65	0.65	4.64	0.68	4.57	0.7	4.23	0.7						
830	7927	41	14204		13789		12795		12297		11303		10723		10142		8816		8070					
			5.41	0.3	5.58	0.36	5.9	0.47	6.01	0.51	6.14	0.58	6.17	0.61	6.16	0.63	6.02	0.66	5.88	0.67				
904	8637	47	15476		15115		14212		13761		12857		12406		11864		10780		10238		8884		8071	
			6.99	0.26	7.17	0.3	7.54	0.4	7.68	0.44	7.87	0.51	7.93	0.54	7.97	0.57	7.95	0.61	7.9	0.63	7.63	0.64	7.38	0.65
Maximum RPM 903.9					Max HP: 10.00				Outlet Area (Sq.Ft.): 11.88				Wheel Diameter (in): 36.5				Tip Speed: 9.56 x RPM				Max Motor Frame Size: 215T			

Performance certified is for installation type A: Free inlet, Free outlet. Power rating (Bhp) does not include transmission losses. Performance ratings do not include the effects of appurtenances. The sound ratings shown are loudness values in fan sones at 5 ft. (1.5 m) in a hemispherical free field calculated per AMCA Standard 301. Values shown are for installation type A: Free inlet hemispherical sone levels. FEI calculation is based on default motor calculation in accordance with ANS/AMCA Standard 208.

PRD 365-030 BELT DRIVE

RPM	Tip Speed	Max Sones	0.00"SP		0.38"SP		0.75"SP		1.12"SP		1.50"SP		2.00"SP		2.38"SP		2.75"SP		3.12"SP		3.50"SP		3.88"SP	
			CFM		CFM		CFM		CFM		CFM		CFM		CFM		CFM		CFM		CFM		CFM	
			BHP	FEI	BHP	FEI	BHP	FEI	BHP	FEI	BHP	FEI	BHP	FEI	BHP	FEI	BHP	FEI	BHP	FEI	BHP	FEI	BHP	FEI
350	3344	8.1	3657		1987																			
			0.26	1.44	0.28	1.52																		
433	4141	12.1	4549		3317																			
			0.51	0.99	0.55	1.27																		
517	4937	16.4	5439		4461		3298																	
			0.88	0.71	0.93	1.02	0.95	1.11																
600	5733	21	6321		5449		4531		3333															
			1.38	0.54	1.37	0.86	1.46	0.99	1.44	1														
683	6530	25	7251		6433		5691		4835		3705													
			1.99	0.43	2.02	0.69	2.13	0.84	2.21	0.92	2.15	0.92												
767	7326	30	8229		7405		6676		5999		5270		3863											
			2.71	0.36	2.86	0.56	3	0.71	3.11	0.81	3.16	0.87	3.02	0.87										
850	8122	37	9000		8370		7767		7140		6504		5577		4653									
			3.66	0.29	3.97	0.45	4.02	0.6	4.12	0.72	4.2	0.81	4.22	0.87	4.12	0.87								
933	8919	42	9771		9285		8725		8178		7675		6846		6208		5446		4499					
			4.79	0.24	5.41	0.37	5.31	0.52	5.37	0.64	5.45	0.73	5.53	0.82	5.53	0.85	5.46	0.87	5.23	0.84				
1017	9715	49	10542		10147		9699		9260		8726		8105		7548		6920		6296		5470		4509	
			6.11	0.21	7.18	0.31	6.9	0.45	6.9	0.55	6.97	0.65	7.06	0.74	7.1	0.8	7.11	0.84	7.06	0.86	6.9	0.85	6.56	0.82
1100	10511	55	11393		11033		10601		10169		9664		9088		8584		8007		7503		6855		6134	
			7.72	0.18	7.85	0.29	8.01	0.41	8.17	0.51	8.34	0.6	8.5	0.69	8.61	0.75	8.69	0.79	8.71	0.82	8.66	0.84	8.52	0.84
Maximum RPM 1100					Max HP: 10.00				Outlet Area (Sq.Ft.): 11.88				Wheel Diameter (in): 36.5				Tip Speed: 9.56 x RPM				Max Motor Frame Size: 215T			

Performance certified is for installation type A: Free inlet, Free outlet. Power rating (Bhp) does not include transmission losses. Performance ratings do not include the effects of appurtenances. The sound ratings shown are loudness values in fan sones at 5 ft. (1.5 m) in a hemispherical free field calculated per AMCA Standard 301. Values shown are for installation type A: Free inlet hemispherical sone levels. FEI calculation is based on default motor calculation in accordance with ANS/AMCA Standard 208.

PRD 402-100 BELT DRIVE

RPM	Tip Speed	Max Sones	0.00"SP		0.12"SP		0.25"SP		0.38"SP		0.50"SP		0.75"SP		0.88"SP		1.00"SP		1.12"SP		1.25"SP		1.38"SP	
			CFM		CFM		CFM		CFM		CFM		CFM		CFM		CFM		CFM		CFM		CFM	
			BHP	FEI	BHP	FEI	BHP	FEI	BHP	FEI	BHP	FEI	BHP	FEI	BHP	FEI	BHP	FEI	BHP	FEI	BHP	FEI	BHP	FEI
213	2248	5.5	8282		6619																			
			0.27	2.77	0.3	2.68																		
265	2798	8.1	10410		9124		7336																	
			0.53	1.95	0.55	2.12	0.58	2.04																
318	3348	11.1	12539		11446		10222		8470															
			0.91	1.43	0.91	1.66	0.97	1.73	0.98	1.71														
370	3898	14.3	14667		13644		12670		11611		10023													
			1.44	1.08	1.4	1.34	1.5	1.43	1.55	1.5	1.55	1.51												
422	4447	18.5	16795		15847		15074		14125		13088		9292											
			2.15	0.84	2.01	1.09	2.16	1.18	2.25	1.27	2.31	1.34	2.15	1.31										
474	4997	22	18985		18207		17508		16748		15919		13922		12439									
			3.06	0.68	3.07	0.84	3.18	0.95	3.26	1.05	3.32	1.14	3.38	1.25	3.31	1.26								
526	5547	26	21296		20650		19978		19322		18676		16977		16024		14749		12808					
			4.16	0.56	3.87	0.74	4.16	0.83	4.32	0.92	4.43	0.99	4.58	1.13	4.6	1.17	4.56	1.2	4.38	1.18				
579	6097	30	23607		23005		22396		21911		21183		19850		19124		18156		17066		15734		13551	
			5.52	0.47	4.76	0.67	5.32	0.74	5.54	0.8	5.77	0.88	6	1.01	6.06	1.05	6.1	1.1	6.08	1.13	5.98	1.15	5.68	1.13
631	6647	35	25758		25361		24831		24301		23772		22580		21918		21255		20461		19666		18607	
			7.16	0.4	7.31	0.48	7.48	0.57	7.62	0.66	7.75	0.73	7.96	0.86	8.04	0.92	8.09	0.97	8.12	1.02	8.12	1.05	8.07	1.08
683	7197	40	27889		27459		27029		26599		26025		25021		24448		23874		23301		22584		21867	
			9.09	0.34	9.27	0.42	9.44	0.5	9.59	0.56	9.76	0.64	10	0.76	10.11	0.82	10.19	0.87	10.25	0.91	10.3	0.96	10.32	0.99
Maximum RPM 683					Max HP: 10.00				Outlet Area (Sq.Ft.): 14.47				Wheel Diameter (in): 40.25				Tip Speed: 10.54 x RPM				Max Motor Frame Size: 215T			

Performance certified is for installation type A: Free inlet, Free outlet. Power rating (Bhp) does not include transmission losses. Performance ratings do not include the effects of appurtenances. The sound ratings shown are loudness values in fan sones at 5 ft. (1.5 m) in a hemispherical free field calculated per AMCA Standard 301. Values shown are for installation type A: Free inlet hemispherical sone levels. FEI calculation is based on default motor calculation in accordance with ANS/AMCA Standard 208.

PRD 402-080 BELT DRIVE

RPM	Tip Speed	Max Sones	0.00"SP		0.25"SP		0.50"SP		0.62"SP		0.88"SP		1.12"SP		1.38"SP		1.62"SP		1.75"SP		2.00"SP		2.25"SP	
			CFM		CFM		CFM		CFM		CFM		CFM		CFM		CFM		CFM		CFM		CFM	
			BHP	FEI	BHP	FEI	BHP	FEI	BHP	FEI	BHP	FEI	BHP	FEI	BHP	FEI	BHP	FEI	BHP	FEI	BHP	FEI	BHP	FEI
214	2255	5.6	7687																					
			0.23	2.95																				
270	2844	8.3	10087		6903																			
			0.43	2.24	0.55	2.02																		
326	3433	11.5	12487		9606																			
			0.75	1.67	0.95	1.68																		
382	4022	15.3	14887		11945		9776																	
			1.23	1.27	1.47	1.37	1.53	1.49																
438	4611	19.6	17288		14215		12537		11565															
			1.88	0.98	2.13	1.13	2.28	1.29	2.3	1.34														
493	5200	24	18985		16583		15204		14500		12587													
			2.82	0.73	3.3	0.87	3.41	1.06	3.43	1.13	3.41	1.25												
549	5789	28	20322		18842		17694		17026		15660		13844											
			3.98	0.56	4.7	0.7	4.76	0.88	4.8	0.96	4.82	1.09	4.72	1.18										
605	6377	33	21916		20910		19905		19346		18117		16776		14989		11860							
			5.32	0.46	5.72	0.64	5.99	0.78	6.1	0.85	6.23	0.98	6.26	1.08	6.14	1.14	5.64	1.14						
661	6966	40	23939		23085		22109		21621		20522		19424		18081		16495		15396					
			6.93	0.39	7.35	0.53	7.71	0.68	7.84	0.74	8.05	0.86	8.14	0.96	8.15	1.04	8.02	1.1	7.86	1.12				
717	7555	43	25963		25169		24243		23845		22919		21860		20801		19610		18816		17095		14580	
			8.84	0.33	9.31	0.46	9.73	0.6	9.88	0.65	10.14	0.76	10.32	0.86	10.4	0.94	10.39	1.01	10.34	1.04	10.1	1.08	9.53	1.08
Maximum RPM 717					Max HP: 10.00				Outlet Area (Sq.Ft.): 14.47				Wheel Diameter (in): 40.25				Tip Speed: 10.54 x RPM				Max Motor Frame Size: 215T			

Performance certified is for installation type A: Free inlet, Free outlet. Power rating (Bhp) does not include transmission losses. Performance ratings do not include the effects of appurtenances. The sound ratings shown are loudness values in fan sones at 5 ft. (1.5 m) in a hemispherical free field calculated per AMCA Standard 301. Values shown are for installation type A: Free inlet hemispherical sone levels. FEI calculation is based on default motor calculation in accordance with ANS/AMCA Standard 208.

PRD 402-050 BELT DRIVE

RPM	Tip Speed	Max Sones	0.00"SP		0.12"SP		0.25"SP		0.50"SP		0.62"SP		0.75"SP		0.88"SP		1.00"SP		1.25"SP		1.38"SP		1.50"SP	
			CFM		CFM		CFM		CFM		CFM		CFM		CFM		CFM		CFM		CFM		CFM	
			BHP	FEI	BHP	FEI	BHP	FEI	BHP	FEI	BHP	FEI	BHP	FEI	BHP	FEI	BHP	FEI	BHP	FEI	BHP	FEI	BHP	FEI
213	2248	4.8	9201		7673		5319																	
			0.45	2	0.5	2	0.5	1.74																
277	2918	7.6	9924		8644		6899																	
			0.77	1.34	0.85	1.39	0.85	1.39																
340	3587	10.8	10646		9566		8196																	
			1.14	1.01	1.27	1.06	1.27	1.12																
404	4257	15.0	11368		10437		9337		6600															
			1.56	0.8	1.77	0.84	1.76	0.93	1.67	0.97														
468	4927	19.1	12090		11314		10314		8208		6834													
			2.04	0.66	2.35	0.69	2.33	0.79	2.3	0.87	2.2	0.87												
531	5597	23	12812		12081		11293		9453		8431		7247											
			2.58	0.56	3.02	0.59	2.97	0.67	3	0.78	2.95	0.8	2.84	0.81										
595	6267	28	13655		12938		12221		10627		9751		8794		7599		6005							
			3.25	0.48	3.42	0.55	3.55	0.61	3.7	0.71	3.7	0.74	3.65	0.76	3.51	0.76	3.2	0.73						
658	6937	33	15115		14497		13880		12469		11675		10881		10087		9029							
			4.4	0.39	4.6	0.46	4.75	0.52	4.97	0.61	5.02	0.65	5.02	0.68	4.98	0.7	4.86	0.71						
722	7607	38	16574		15994		15414		14156		13576		12899		12125		11351		9514		8450			
			5.81	0.33	6.03	0.39	6.21	0.44	6.49	0.54	6.56	0.57	6.61	0.61	6.63	0.64	6.59	0.66	6.33	0.68	6.08	0.68		
785	8277	45	18034		17508		16982		15824		15298		14666		14035		13403		11930		11193		10246	
			7.48	0.28	7.72	0.33	7.93	0.38	8.27	0.47	8.37	0.51	8.46	0.54	8.52	0.57	8.54	0.6	8.45	0.64	8.34	0.65	8.13	0.65
Maximum RPM 785.45					Max HP: 10.00				Outlet Area (Sq.Ft.): 14.47				Wheel Diameter (in): 40.25				Tip Speed: 10.54 x RPM				Max Motor Frame Size: 215T			

Performance certified is for installation type A: Free inlet, Free outlet. Power rating (Bhp) does not include transmission losses. Performance ratings do not include the effects of appurtenances. The sound ratings shown are loudness values in fan sones at 5 ft. (1.5 m) in a hemispherical free field calculated per AMCA Standard 301. Values shown are for installation type A: Free inlet hemispherical sone levels. FEI calculation is based on default motor calculation in accordance with ANS/AMCA Standard 208.

PRD 402-030 BELT DRIVE

RPM	Tip Speed	Max Sones	0.00"SP		0.38"SP		0.75"SP		1.25"SP		1.62"SP		2.00"SP		2.38"SP		2.75"SP		3.25"SP		3.62"SP		4.00"SP	
			CFM		CFM		CFM		CFM		CFM		CFM		CFM		CFM		CFM		CFM		CFM	
			BHP	FEI	BHP	FEI	BHP	FEI	BHP	FEI	BHP	FEI	BHP	FEI	BHP	FEI	BHP	FEI	BHP	FEI	BHP	FEI	BHP	FEI
214	2255	4.1	2963																					
			0.09	2.75																				
296	3124	7.3	4146		1786																			
			0.26	1.62	0.26	1.48																		
379	3993	11.3	5330		3753																			
			0.56	1.04	0.6	1.31																		
461	4861	16.1	6511		5301		3826																	
			1.02	0.72	1.09	1.03	1.1	1.11																
544	5730	21	7682		6622		5505		3271															
			1.67	0.53	1.67	0.85	1.78	0.98	1.64	0.94														
626	6599	26	8920		7953		7042		5643		4089													
			2.48	0.42	2.52	0.67	2.66	0.82	2.77	0.92	2.62	0.89												
709	7468	32	10173		9242		8408		7246		6341		5113											
			3.48	0.34	3.68	0.53	3.84	0.68	4.01	0.82	4.05	0.87	3.94	0.87										
791	8336	39	11196		10442		9768		8774		8051		7181		6242		4876							
			4.8	0.28	5.25	0.43	5.27	0.58	5.42	0.73	5.51	0.8	5.54	0.85	5.47	0.87	5.16	0.83						
874	9205	46	12219		11644		11027		10194		9561		8920		8117		7318		5968					
			6.37	0.23	7.28	0.35	7.11	0.49	7.19	0.64	7.28	0.72	7.35	0.78	7.39	0.83	7.34	0.85	7.07	0.84				
956	10074	54	13278		12774		12270		11514		10926		10254		9666		8909		7901		6977		5717	
			8.26	0.19	8.43	0.32	8.61	0.44	8.85	0.57	9.02	0.66	9.17	0.73	9.26	0.78	9.32	0.82	9.26	0.85	9.08	0.84	8.61	0.81
Maximum RPM 956					Max HP: 10.00				Outlet Area (Sq.Ft.): 14.47				Wheel Diameter (in): 40.25				Tip Speed: 10.54 x RPM				Max Motor Frame Size: 215T			

Performance certified is for installation type A: Free inlet, Free outlet. Power rating (Bhp) does not include transmission losses. Performance ratings do not include the effects of appurtenances. The sound ratings shown are loudness values in fan sones at 5 ft. (1.5 m) in a hemispherical free field calculated per AMCA Standard 301. Values shown are for installation type A: Free inlet hemispherical sone levels. FEI calculation is based on default motor calculation in accordance with ANS/AMCA Standard 208.

PRD 445-100 BELT DRIVE

RPM	Tip Speed	Max Sones	0.00"SP		0.12"SP		0.38"SP		0.50"SP		0.75"SP		0.88"SP		1.00"SP		1.25"SP		1.38"SP		1.62"SP		1.75"SP	
			CFM		CFM		CFM		CFM		CFM		CFM		CFM		CFM		CFM		CFM		CFM	
			BHP	FEI	BHP	FEI	BHP	FEI	BHP	FEI	BHP	FEI	BHP	FEI	BHP	FEI	BHP	FEI	BHP	FEI	BHP	FEI	BHP	FEI
236	2749	9.4	12861		10146																			
			0.74	1.75	0.75	1.79																		
277	3228	13.2	15184		13412		7047																	
			1.19	1.32	1.29	1.41	1.05	1.37																
318	3708	16.4	17434		16158		11471		7911															
			1.79	1.04	1.91	1.15	1.76	1.32	1.54	1.23														
359	4188	19.5	19555		18626		15014		12633															
			2.49	0.85	2.91	0.89	2.62	1.17	2.48	1.21														
401	4667	23	21780		20805		18019		15929		11054													
			3.44	0.69	3.54	0.83	3.57	1.03	3.46	1.1	3.06	1.1												
442	5147	27	24018		23250		20792		19256		15262		12958		9885									
			4.61	0.57	4.72	0.68	4.81	0.89	4.75	0.96	4.44	1.05	4.2	1.05	3.79	0.98								
483	5626	32	26256		25584		23569		22226		18867		17020		15005									
			6.02	0.48	6.14	0.58	6.29	0.76	6.28	0.84	6.03	0.96	5.83	0.99	5.59	1								
524	6106	38	28494		27947		26125		25031		22298		20657		18835		15008		12456					
			7.7	0.41	7.82	0.49	8.03	0.67	8.05	0.74	7.89	0.86	7.72	0.9	7.5	0.94	6.95	0.95	6.49	0.92				
565	6585	44	30732		30142		28570		27587		25228		23852		22476		19331		17366		13041			
			9.66	0.35	9.81	0.43	10.04	0.59	10.09	0.66	10.01	0.77	9.88	0.82	9.71	0.86	9.26	0.91	8.93	0.92	8.04	0.88		
606	7065	49	32970		32548		31072		30228		28120		27065		25800		22848		21372		18209		16100	
			11.93	0.31	12.06	0.36	12.35	0.51	12.43	0.58	12.44	0.7	12.36	0.74	12.23	0.78	11.8	0.85	11.55	0.88	10.95	0.89	10.48	0.88
Maximum RPM 606.4105					Max HP: 10.00				Outlet Area (Sq.Ft.): 11.43				Wheel Diameter (in): 44.5				Tip Speed: 11.65 x RPM				Max Motor Frame Size: 215T			

Performance certified is for installation type A: Free inlet, Free outlet. Power rating (Bhp) does not include transmission losses. Performance ratings do not include the effects of appurtenances. The sound ratings shown are loudness values in fan sones at 5 ft. (1.5 m) in a hemispherical free field calculated per AMCA Standard 301. Values shown are for installation type A: Free inlet hemispherical sone levels. FEI calculation is based on default motor calculation in accordance with ANS/AMCA Standard 208.

PRD 445-080 BELT DRIVE

RPM	Tip Speed	Max Sones	0.00"SP		0.25"SP		0.38"SP		0.62"SP		0.75"SP		1.00"SP		1.25"SP		1.38"SP		1.62"SP		1.75"SP		2.00"SP	
			CFM		CFM		CFM		CFM		CFM		CFM		CFM		CFM		CFM		CFM		CFM	
			BHP	FEI	BHP	FEI	BHP	FEI	BHP	FEI	BHP	FEI	BHP	FEI	BHP	FEI	BHP	FEI	BHP	FEI	BHP	FEI	BHP	FEI
236	2749	9.0	4444		2465																			
			0.21	2.02	0.22	1.83																		
281	3268	12.8	5309		3768		2724																	
			0.37	1.49	0.4	1.58	0.38	1.5																
325	3788	15.9	6173		4841		4134																	
			0.58	1.14	0.62	1.35	0.62	1.37																
370	4307	19.2	7038		5870		5286		3759															
			0.86	0.9	0.89	1.16	0.91	1.2	0.88	1.2														
414	4826	23	7900		6922		6417		5262		4558													
			1.22	0.73	1.28	0.96	1.31	1.03	1.33	1.1	1.31	1.1												
459	5345	27	8756		7880		7432		6426		5868		4527											
			1.66	0.6	1.65	0.84	1.7	0.91	1.77	1.01	1.79	1.03	1.73	1.01										
503	5864	33	9611		8759		8389		7529		7038		5994		4581									
			2.19	0.5	2.09	0.75	2.15	0.81	2.27	0.92	2.31	0.95	2.34	0.98	2.22	0.94								
548	6383	39	10508		9736		9353		8608		8190		7347		6368		5745		4104					
			2.78	0.44	2.79	0.62	2.84	0.7	2.94	0.81	2.99	0.85	3.07	0.91	3.08	0.93	3.04	0.92	2.76	0.85				
592	6902	44	11460		10611		10184		9452		9081		8335		7514		7067		6027		5288			
			3.42	0.39	3.32	0.57	3.43	0.64	3.59	0.74	3.66	0.78	3.77	0.84	3.83	0.88	3.83	0.89	3.76	0.89	3.64	0.87		
637	7421	49	12368		11527		11214		10504		10188		9475		8760		8443		7649		7173		6142	
			4.18	0.34	4.36	0.48	4.42	0.53	4.55	0.64	4.61	0.68	4.73	0.76	4.82	0.82	4.85	0.83	4.86	0.86	4.84	0.87	4.72	0.86
Maximum RPM 637					Max HP: 10.00				Outlet Area (Sq.Ft.): 11.43				Wheel Diameter (in): 44.5				Tip Speed: 11.65 x RPM				Max Motor Frame Size: 215T			

Performance certified is for installation type A: Free inlet, Free outlet. Power rating (Bhp) does not include transmission losses. Performance ratings do not include the effects of appurtenances. The sound ratings shown are loudness values in fan sones at 5 ft. (1.5 m) in a hemispherical free field calculated per AMCA Standard 301. Values shown are for installation type A: Free inlet hemispherical sone levels. FEI calculation is based on default motor calculation in accordance with ANS/AMCA Standard 208.

PRD 445-050 BELT DRIVE

RPM	Tip Speed	Max Sones	0.00"SP		0.25"SP		0.50"SP		0.75"SP		1.00"SP		1.25"SP		1.50"SP		1.75"SP		2.00"SP		2.25"SP		2.50"SP	
			CFM		CFM		CFM		CFM		CFM		CFM		CFM		CFM		CFM		CFM		CFM	
			BHP	FEI	BHP	FEI	BHP	FEI	BHP	FEI	BHP	FEI	BHP	FEI	BHP	FEI	BHP	FEI	BHP	FEI	BHP	FEI	BHP	FEI
236	2749	7.9	6732		3570																			
			0.39	1.72	0.37	1.6																		
287	3346	11.6	8078		6011																			
			0.61	1.38	0.65	1.55																		
338	3943	14.8	9428		7950		5180																	
			0.92	1.1	0.99	1.35	0.87	1.41																
390	4541	18.3	10888		9503		7548		4501															
			1.49	0.8	1.52	1.09	1.5	1.2	1.25	1.13														
441	5138	22	12344		11202		9621		7600		4789													
			2.23	0.62	2.32	0.84	2.34	0.99	2.24	1.05	1.88	0.99												
492	5735	28	13779		12799		11524		9857		7994		5248											
			3.1	0.5	3.21	0.7	3.26	0.85	3.22	0.95	3.06	0.99	2.59	0.92										
544	6333	34	15214		14348		13265		11966		10342		8610		6119									
			4.17	0.41	4.3	0.59	4.38	0.73	4.39	0.84	4.29	0.91	4.09	0.94	3.58	0.89								
595	6930	39	16649		15938		14872		13806		12502		11080		9303		7170							
			5.46	0.35	5.6	0.49	5.72	0.64	5.76	0.74	5.72	0.82	5.6	0.87	5.34	0.9	4.83	0.87						
646	7527	44	18084		17441		16540		15510		14481		13194		11907		10234		8432		5601			
			7	0.3	7.16	0.42	7.29	0.55	7.37	0.66	7.38	0.73	7.31	0.8	7.16	0.84	6.87	0.87	6.4	0.86	5.32	0.77		
697	8124	49	19519		18963		18130		17297		16324		15213		14102		12713		11323		9657		7573	
			8.81	0.25	8.96	0.36	9.13	0.48	9.23	0.57	9.28	0.66	9.26	0.73	9.17	0.78	8.98	0.82	8.7	0.84	8.23	0.84	7.43	0.81
Maximum RPM 697.372075					Max HP: 10.00				Outlet Area (Sq.Ft.): 11.43				Wheel Diameter (in): 44.5				Tip Speed: 11.65 x RPM				Max Motor Frame Size: 215T			

Performance certified is for installation type A: Free inlet, Free outlet. Power rating (Bhp) does not include transmission losses. Performance ratings do not include the effects of appurtenances. The sound ratings shown are loudness values in fan sones at 5 ft. (1.5 m) in a hemispherical free field calculated per AMCA Standard 301. Values shown are for installation type A: Free inlet hemispherical sone levels. FEI calculation is based on default motor calculation in accordance with ANS/AMCA Standard 208.

PRD 445-030 BELT DRIVE

RPM	Tip Speed	Max Sones	0.00"SP		0.25"SP		0.50"SP		0.75"SP		1.00"SP		1.25"SP		1.50"SP		1.75"SP		2.00"SP		2.25"SP		2.50"SP	
			CFM		CFM		CFM		CFM		CFM		CFM		CFM		CFM		CFM		CFM		CFM	
			BHP	FEI	BHP	FEI	BHP	FEI	BHP	FEI	BHP	FEI	BHP	FEI	BHP	FEI	BHP	FEI	BHP	FEI	BHP	FEI	BHP	FEI
236	2749	6.8	4173		2175																			
			0.26	1.6	0.25	1.49																		
304	3543	11.0	4900		3773		1858																	
			0.45	1.17	0.48	1.36	0.4	1.19																
372	4336	14.9	5901		5011		3764																	
			0.78	0.85	0.79	1.12	0.79	1.17																
440	5130	19.5	7192		6394		5413		4276		2555													
			1.37	0.61	1.36	0.84	1.4	0.95	1.4	0.98	1.18	0.88												
508	5923	26	8693		8010		7208		6259		5263		4018											
			2.35	0.43	2.42	0.6	2.47	0.72	2.48	0.8	2.45	0.84	2.31	0.81										
577	6717	32	9883		9271		8523		7761		6925		6097		4975		3403							
			3.38	0.34	3.27	0.51	3.42	0.62	3.49	0.71	3.5	0.77	3.48	0.79	3.35	0.79	2.98	0.71						
645	7510	38	11073		10507		9837		9162		8485		7725		6967		6043		4868					
			4.69	0.28	4.24	0.44	4.57	0.54	4.7	0.62	4.76	0.68	4.79	0.73	4.77	0.76	4.68	0.77	4.44	0.74				
713	8304	44	12258		11793		11234		10675		10116		9465		8813		8161		7416		6578		5553	
			6.31	0.23	6.41	0.33	6.51	0.43	6.57	0.51	6.62	0.58	6.66	0.64	6.67	0.68	6.66	0.71	6.61	0.73	6.49	0.74	6.24	0.72
781	9097	51	13430		13022		12511		12001		11491		10879		10369		9757		9145		8532		7818	
			8.3	0.19	8.41	0.27	8.52	0.36	8.6	0.44	8.67	0.5	8.72	0.57	8.75	0.61	8.77	0.65	8.76	0.68	8.73	0.7	8.64	0.71
849	9891	59	14601		14268		13825		13270		12826		12383		11828		11273		10719		10164		9609	
			10.67	0.16	10.78	0.23	10.9	0.3	11.02	0.38	11.09	0.44	11.15	0.49	11.21	0.54	11.25	0.59	11.27	0.62	11.27	0.65	11.24	0.67
Maximum RPM 849					Max HP: 10.00				Outlet Area (Sq.Ft.): 11.43				Wheel Diameter (in): 44.5				Tip Speed: 11.65 x RPM				Max Motor Frame Size: 215T			

Performance certified is for installation type A: Free inlet, Free outlet. Power rating (Bhp) does not include transmission losses. Performance ratings do not include the effects of appurtenances. The sound ratings shown are loudness values in fan sones at 5 ft. (1.5 m) in a hemispherical free field calculated per AMCA Standard 301. Values shown are for installation type A: Free inlet hemispherical sone levels. FEI calculation is based on default motor calculation in accordance with ANS/AMCA Standard 208.

PRD 490-100 BELT DRIVE

RPM	Tip Speed	Max Sones	0.00"SP		0.12"SP		0.38"SP		0.50"SP		0.62"SP		0.88"SP		1.00"SP		1.12"SP		1.25"SP		1.50"SP		1.62"SP	
			CFM		CFM		CFM		CFM		CFM		CFM		CFM		CFM		CFM		CFM		CFM	
			BHP	FEI	BHP	FEI	BHP	FEI	BHP	FEI	BHP	FEI	BHP	FEI	BHP	FEI	BHP	FEI	BHP	FEI	BHP	FEI	BHP	FEI
214	2749	9.2	15593		12302																			
			0.89	1.76	0.91	1.8																		
248	3187	12.5	18170		15914		7826																	
			1.39	1.35	1.5	1.44	1.19	1.34																
283	3626	16.5	20699		19022		13061		8034															
			2.04	1.07	2.16	1.2	1.98	1.34	1.63	1.18														
317	4065	19.5	23052		21778		17212		14122		10170													
			2.78	0.89	3.16	0.95	2.89	1.21	2.71	1.23	2.41	1.15												
351	4503	22	25481		24341		20592		17984		14888													
			3.75	0.74	3.86	0.87	3.87	1.08	3.73	1.14	3.5	1.15												
385	4942	26	27963		26890		23850		21703		19199		13119											
			4.95	0.62	5.08	0.74	5.16	0.94	5.06	1.02	4.88	1.06	4.28	1.04										
419	5381	29	30445		29471		26940		24993		23045		18177		15256									
			6.39	0.52	6.54	0.63	6.68	0.82	6.62	0.9	6.49	0.96	6.02	1.02	5.67	1.01								
454	5819	34	32927		32084		29768		28294		26609		22397		20080		17553		14394					
			8.08	0.45	8.24	0.54	8.44	0.72	8.43	0.8	8.35	0.86	7.95	0.95	7.67	0.98	7.33	0.97	6.81	0.93				
488	6258	39	35409		34729		32691		31332		29747		26350		24311		22273		20008		13894			
			10.05	0.39	10.21	0.47	10.46	0.63	10.5	0.71	10.46	0.78	10.16	0.87	9.91	0.91	9.63	0.93	9.3	0.94	8.11	0.87		
522	6696	45	37890		37163		35224		34255		33043		29893		28196		26258		24319		19957		17291	
			12.32	0.34	12.51	0.42	12.8	0.57	12.86	0.63	12.87	0.69	12.65	0.8	12.45	0.84	12.18	0.87	11.88	0.9	11.12	0.91	10.55	0.89

Maximum RPM 522	Max HP: 10.00	Outlet Area (Sq.Ft.): 13.83	Wheel Diameter (in): 49	Tip Speed: 12.83 x RPM	Max Motor Frame Size: 215T

Performance certified is for installation type A: Free inlet, Free outlet. Power rating (Bhp) does not include transmission losses. Performance ratings do not include the effects of appurtenances. The sound ratings shown are loudness values in fan sones at 5 ft. (1.5 m) in a hemispherical free field calculated per AMCA Standard 301. Values shown are for installation type A: Free inlet hemispherical sone levels. FEI calculation is based on default motor calculation in accordance with ANS/AMCA Standard 208.

PRD 490-080 BELT DRIVE

RPM	Tip Speed	Max Sones	0.00"SP		0.12"SP		0.38"SP		0.50"SP		0.62"SP		0.88"SP		1.00"SP		1.12"SP		1.25"SP		1.50"SP		1.62"SP	
			CFM		CFM		CFM		CFM		CFM		CFM		CFM		CFM		CFM		CFM		CFM	
			BHP	FEI	BHP	FEI	BHP	FEI	BHP	FEI	BHP	FEI	BHP	FEI	BHP	FEI	BHP	FEI	BHP	FEI	BHP	FEI	BHP	FEI
214	2745	8.8	5380		4309																			
			0.25	2.03	0.3	1.89																		
251	3221	12.2	6342		5427		3094																	
			0.42	1.53	0.46	1.58	0.43	1.48																
288	3697	15.9	7303		6472		4707		3451															
			0.65	1.19	0.66	1.34	0.7	1.39	0.65	1.29														
325	4173	19.0	8264		7527		6051		5156		3995													
			0.95	0.95	0.92	1.14	1.01	1.24	1	1.25	0.95	1.18												
362	4649	22	9225		8573		7276		6569		5743													
			1.32	0.77	1.23	0.98	1.37	1.09	1.4	1.13	1.39	1.14												
400	5126	26	10178		9627		8451		7867		7219		5662		4493									
			1.77	0.64	1.73	0.79	1.85	0.96	1.89	1.01	1.92	1.04	1.88	1.04	1.77	0.99								
437	5602	30	11129		10579		9580		9011		8443		7164		6382		5458							
			2.32	0.54	2.13	0.72	2.32	0.86	2.39	0.92	2.44	0.96	2.48	1	2.46	0.99	2.37	0.97						
474	6078	35	12080		11543		10616		10152		9611		8530		7912		7216		6444					
			2.96	0.47	2.58	0.65	2.87	0.78	2.95	0.83	3.02	0.88	3.13	0.94	3.15	0.95	3.14	0.95	3.09	0.94				
511	6554	41	13120		12625		11696		11197		10771		9820		9298		8776		8170		6795		5859	
			3.61	0.42	3.48	0.52	3.67	0.67	3.75	0.73	3.82	0.78	3.94	0.86	3.99	0.88	4.02	0.9	4.02	0.91	3.93	0.9	3.78	0.87
548	7030	48	14179		13613		12646		12196		11742		10918		10459		10000		9449		8348		7708	
			4.36	0.37	3.98	0.49	4.33	0.61	4.45	0.67	4.55	0.72	4.71	0.79	4.78	0.82	4.83	0.84	4.88	0.87	4.88	0.88	4.83	0.88

Maximum RPM 548	Max HP: 10.00	Outlet Area (Sq.Ft.): 11.43	Wheel Diameter (in): 49	Tip Speed: 12.83 x RPM	Max Motor Frame Size: 254T

Performance certified is for installation type A: Free inlet, Free outlet. Power rating (Bhp) does not include transmission losses. Performance ratings do not include the effects of appurtenances. The sound ratings shown are loudness values in fan sones at 5 ft. (1.5 m) in a hemispherical free field calculated per AMCA Standard 301. Values shown are for installation type A: Free inlet hemispherical sone levels. FEI calculation is based on default motor calculation in accordance with ANS/AMCA Standard 208.

PRD 490-050 BELT DRIVE

RPM	Tip Speed	Max Sones	0.00"SP		0.25"SP		0.50"SP		0.62"SP		0.88"SP		1.12"SP		1.38"SP		1.62"SP		1.75"SP		2.00"SP		2.25"SP	
			CFM		CFM		CFM		CFM		CFM		CFM		CFM		CFM		CFM		CFM		CFM	
			BHP	FEI	BHP	FEI	BHP	FEI	BHP	FEI	BHP	FEI	BHP	FEI	BHP	FEI	BHP	FEI	BHP	FEI	BHP	FEI	BHP	FEI
214	2749	7.7	8162		4328																			
			0.47	1.72	0.45	1.6																		
257	3299	11.4	9665		7112																			
			0.71	1.4	0.76	1.57																		
300	3848	14.9	11167		9382		6103																	
			1.04	1.14	1.17	1.35	1.02	1.41																
343	4398	18.1	12779		11098		8515		6764															
			1.62	0.86	1.68	1.13	1.63	1.24	1.51	1.23														
386	4948	21	14409		12784		10733		9499		5906													
			2.4	0.66	2.35	0.95	2.41	1.07	2.36	1.09	1.99	1.03												
429	5498	25	16015		14761		13052		12026		9747		6555											
			3.31	0.54	3.44	0.75	3.49	0.9	3.47	0.95	3.32	1.01	2.86	0.95										
471	6048	30	17617		16488		15109		14232		12351		10094		6960									
			4.4	0.45	4.56	0.64	4.63	0.78	4.64	0.84	4.56	0.92	4.33	0.95	3.75	0.9								
514	6597	36	19218		18261		17030		16209		14705		12790		10602		7866							
			5.72	0.38	5.88	0.54	5.99	0.68	6.02	0.74	6	0.83	5.86	0.89	5.56	0.91	4.94	0.88						
557	7147	43	20820		19931		18745		18153		16819		15189		13411		11485		10300		7040			
			7.27	0.32	7.45	0.47	7.6	0.6	7.64	0.66	7.66	0.75	7.58	0.82	7.39	0.87	7.07	0.88	6.8	0.88	5.76	0.81		
600	7697	48	22421		21623		20666		20028		18911		17475		16039		14283		13326		11252		8539	
			9.08	0.28	9.28	0.4	9.44	0.52	9.5	0.58	9.56	0.67	9.55	0.74	9.44	0.8	9.21	0.84	9.04	0.85	8.53	0.85	7.6	0.81
Maximum RPM 600					Max HP: 10.00				Outlet Area (Sq.Ft.): 13.83				Wheel Diameter (in): 49				Tip Speed: 12.83 x RPM				Max Motor Frame Size: 215T			

Performance certified is for installation type A: Free inlet, Free outlet. Power rating (Bhp) does not include transmission losses. Performance ratings do not include the effects of appurtenances. The sound ratings shown are loudness values in fan sones at 5 ft. (1.5 m) in a hemispherical free field calculated per AMCA Standard 301. Values shown are for installation type A: Free inlet hemispherical sone levels. FEI calculation is based on default motor calculation in accordance with ANS/AMCA Standard 208.

PRD 490-030 BELT DRIVE

RPM	Tip Speed	Max Sones	0.00"SP		0.25"SP		0.50"SP		0.75"SP		1.00"SP		1.25"SP		1.50"SP		1.75"SP		2.00"SP		2.25"SP		2.50"SP	
			CFM		CFM		CFM		CFM		CFM		CFM		CFM		CFM		CFM		CFM		CFM	
			BHP	FEI	BHP	FEI	BHP	FEI	BHP	FEI	BHP	FEI	BHP	FEI	BHP	FEI	BHP	FEI	BHP	FEI	BHP	FEI	BHP	FEI
215	2758	6.8	5069		2644																			
			0.32	1.59	0.31	1.48																		
272	3494	11.1	5886		4470		1984																	
			0.53	1.19	0.56	1.37	0.46	1.13																
330	4229	15.0	6948		5881		4236																	
			0.87	0.89	0.89	1.15	0.88	1.19																
387	4965	18.9	8362		7295		6025		4496															
			1.47	0.64	1.38	0.93	1.45	1.02	1.42	1														
444	5700	24	10039		9141		8013		6877		5428		3132											
			2.48	0.47	2.37	0.68	2.49	0.8	2.52	0.86	2.44	0.86	2.02	0.74										
502	6435	30	11471		10696		9825		8848		7701		6569		5010									
			3.62	0.37	3.58	0.54	3.71	0.65	3.77	0.73	3.77	0.79	3.7	0.8	3.47	0.77								
559	7171	37	12809		12078		11305		10423		9539		8561		7491		6133		4092					
			4.96	0.3	4.64	0.46	4.91	0.56	5.03	0.65	5.09	0.71	5.09	0.75	5.03	0.77	4.83	0.76	4.22	0.66				
616	7906	43	14146		13398		12755		12003		11142		10389		9421		8454		7380		5877			
			6.61	0.25	5.87	0.41	6.3	0.49	6.52	0.57	6.64	0.64	6.7	0.69	6.71	0.73	6.66	0.75	6.51	0.74	6.12	0.71		
674	8642	49	15468		14880		14293		13588		12883		12178		11473		10768		9945		9005		7947	
			8.63	0.21	8.77	0.31	8.87	0.39	8.97	0.48	9.04	0.55	9.09	0.6	9.11	0.65	9.11	0.68	9.08	0.71	8.98	0.72	8.79	0.72
731	9377	56	16784		16274		15764		15127		14489		13852		13214		12449		11811		11046		10281	
			11.02	0.18	11.17	0.26	11.29	0.33	11.4	0.41	11.49	0.48	11.56	0.53	11.61	0.58	11.64	0.63	11.64	0.66	11.62	0.68	11.55	0.7
Maximum RPM 731					Max HP: 15.00				Outlet Area (Sq.Ft.): 13.83				Wheel Diameter (in): 49				Tip Speed: 12.83 x RPM				Max Motor Frame Size: 254T			

Performance certified is for installation type A: Free inlet, Free outlet. Power rating (Bhp) does not include transmission losses. Performance ratings do not include the effects of appurtenances. The sound ratings shown are loudness values in fan sones at 5 ft. (1.5 m) in a hemispherical free field calculated per AMCA Standard 301. Values shown are for installation type A: Free inlet hemispherical sone levels. FEI calculation is based on default motor calculation in accordance with ANS/AMCA Standard 208.

PRD 542-100 BELT DRIVE

RPM	Tip Speed	Max Sones	0.00"SP		0.12"SP		0.38"SP		0.50"SP		0.62"SP		0.88"SP		1.00"SP		1.12"SP		1.25"SP		1.50"SP		1.62"SP	
			CFM		CFM		CFM		CFM		CFM		CFM		CFM		CFM		CFM		CFM		CFM	
			BHP	FEI	BHP	FEI	BHP	FEI	BHP	FEI	BHP	FEI	BHP	FEI	BHP	FEI	BHP	FEI	BHP	FEI	BHP	FEI	BHP	FEI
194	2751	9.5	19132		15092																			
			1.1	1.76	1.11	1.8																		
224	3180	12.3	22214		19451		9420																	
			1.7	1.36	1.82	1.45	1.44	1.33																
254	3608	15.9	25251		23197		15763																	
			2.47	1.08	2.6	1.21	2.38	1.34																
284	4036	20	28065		26503		20763		16825		11829													
			3.35	0.9	3.79	0.96	3.46	1.22	3.23	1.24	2.84	1.13												
314	4464	23	30960		29574		24822		21455		17891													
			4.47	0.75	4.61	0.88	4.61	1.09	4.42	1.15	4.17	1.16												
344	4892	26	33929		32627		28721		26117		22862		15266											
			5.89	0.62	6.05	0.75	6.13	0.96	6.01	1.03	5.77	1.08	5.01	1.03										
375	5320	30	36898		35718		32414		30290		27694		21558		17782									
			7.57	0.53	7.75	0.64	7.91	0.84	7.84	0.91	7.67	0.97	7.08	1.03	6.62	1								
405	5748	33	39868		38848		35788		34003		31963		26608		23803		20488		16408					
			9.55	0.46	9.74	0.55	9.97	0.74	9.96	0.81	9.84	0.87	9.33	0.96	9	0.98	8.54	0.97	7.85	0.92				
435	6176	37	42837		42015		39275		37631		35713		31329		28864		26124		23384					
			11.84	0.4	12.03	0.47	12.35	0.65	12.38	0.73	12.31	0.79	11.91	0.89	11.61	0.92	11.24	0.94	10.83	0.94				
465	6604	43	45806		44927		42583		41118		39653		35845		33501		31157		28813		23247		19731	
			14.48	0.35	14.71	0.43	15.06	0.58	15.13	0.65	15.12	0.71	14.84	0.81	14.56	0.85	14.24	0.89	13.88	0.91	12.9	0.91	12.13	0.88
Maximum RPM 465					Max HP: 10.00				Outlet Area (Sq.Ft.): 17				Wheel Diameter (in): 54.25				Tip Speed: 14.2 x RPM				Max Motor Frame Size: 215T			

Performance certified is for installation type A: Free inlet, Free outlet. Power rating (Bhp) does not include transmission losses. Performance ratings do not include the effects of appurtenances. The sound ratings shown are loudness values in fan sones at 5 ft. (1.5 m) in a hemispherical free field calculated per AMCA Standard 301. Values shown are for installation type A: Free inlet hemispherical sone levels. FEI calculation is based on default motor calculation in accordance with ANS/AMCA Standard 208.

PRD 542-080 BELT DRIVE

RPM	Tip Speed	Max Sones	0.00"SP		0.25"SP		0.38"SP		0.62"SP		0.75"SP		1.00"SP		1.12"SP		1.38"SP		1.50"SP		1.75"SP		1.88"SP	
			CFM		CFM		CFM		CFM		CFM		CFM		CFM		CFM		CFM		CFM		CFM	
			BHP	FEI	BHP	FEI	BHP	FEI	BHP	FEI	BHP	FEI	BHP	FEI	BHP	FEI	BHP	FEI	BHP	FEI	BHP	FEI	BHP	FEI
194	2755	9.0	15754		8668																			
			0.87	1.82	0.84	1.71																		
227	3219	12.1	18685		13616		8574																	
			1.25	1.53	1.29	1.75	1.08	1.58																
259	3683	15.9	21616		17544		14212																	
			1.77	1.27	1.87	1.57	1.74	1.62																
292	4147	19.6	24381		21339		18846		11659															
			2.57	1.01	2.86	1.26	2.78	1.37	2.28	1.38														
325	4611	23	26962		24590		22718		17512		14053													
			3.71	0.78	4.23	0.99	4.17	1.11	3.83	1.23	3.51	1.21												
357	5075	26	29557		27477		25965		21617		18970		11409											
			5.07	0.63	5.39	0.86	5.48	0.96	5.34	1.1	5.11	1.12	4.12	1.04										
390	5539	30	32259		30402		29164		25656		23593		18229		14927									
			6.59	0.53	6.96	0.74	7.08	0.83	7.09	0.98	6.95	1.03	6.33	1.07	5.82	1.04								
423	6003	34	34961		33172		32054		29370		27582		23333		20873		14389							
			8.39	0.46	8.82	0.66	8.98	0.74	9.08	0.88	9.01	0.93	8.58	1.01	8.24	1.02	7.03	0.97						
455	6467	39	37663		36217		35254		32845		31400		27786		25859		21041		18151					
			10.49	0.39	10.92	0.56	11.12	0.64	11.35	0.78	11.35	0.84	11.09	0.93	10.84	0.96	10.03	0.99	9.43	0.97				
488	6931	45	40365		39074		38041		35976		34943		31845		30296		26165		24100		18936		15322	
			12.92	0.34	13.37	0.49	13.63	0.57	13.92	0.7	13.98	0.75	13.87	0.85	13.71	0.89	13.08	0.94	12.67	0.96	11.47	0.94	10.41	0.9
Maximum RPM 488					Max HP: 15.00				Outlet Area (Sq.Ft.): 17				Wheel Diameter (in): 54.25				Tip Speed: 14.2 x RPM				Max Motor Frame Size: 254T			

Performance certified is for installation type A: Free inlet, Free outlet. Power rating (Bhp) does not include transmission losses. Performance ratings do not include the effects of appurtenances. The sound ratings shown are loudness values in fan sones at 5 ft. (1.5 m) in a hemispherical free field calculated per AMCA Standard 301. Values shown are for installation type A: Free inlet hemispherical sone levels. FEI calculation is based on default motor calculation in accordance with ANS/AMCA Standard 208.

PRD 542-050 BELT DRIVE

RPM	Tip Speed	Max Sones	0.00"SP		0.25"SP		0.50"SP		0.62"SP		0.88"SP		1.12"SP		1.38"SP		1.62"SP		1.75"SP		2.00"SP		2.25"SP	
			CFM		CFM		CFM		CFM		CFM		CFM		CFM		CFM		CFM		CFM		CFM	
			BHP	FEI	BHP	FEI	BHP	FEI	BHP	FEI	BHP	FEI	BHP	FEI	BHP	FEI	BHP	FEI	BHP	FEI	BHP	FEI	BHP	FEI
194	2751	7.9	10013		5302																			
			0.58	1.72	0.56	1.59																		
232	3290	11.1	11816		8607																			
			0.87	1.4	0.92	1.57																		
270	3828	15.3	13619		11437		7339																	
			1.26	1.14	1.42	1.36	1.23	1.41																
307	4366	18.6	15547		13512		10254		8123															
			1.94	0.87	2.01	1.14	1.94	1.25	1.8	1.23														
345	4904	22	17503		15540		12923		11423		6807													
			2.86	0.67	2.81	0.96	2.87	1.08	2.81	1.1	2.31	1.02												
383	5442	26	19432		17911		15698		14454		11550		7401											
			3.93	0.55	4.09	0.75	4.14	0.91	4.12	0.96	3.92	1.01	3.29	0.93										
421	5980	29	21354		19986		18163		17099		14819		11932		7829									
			5.22	0.46	5.4	0.64	5.5	0.79	5.5	0.85	5.4	0.93	5.1	0.95	4.29	0.88								
459	6519	35	23275		22116		20459		19631		17478		15325		12509		8699							
			6.76	0.39	6.95	0.54	7.1	0.69	7.12	0.75	7.08	0.84	6.91	0.9	6.51	0.91	5.61	0.85						
497	7057	42	25197		24121		22687		21969		20176		18204		16052		13362		11928					
			8.58	0.33	8.79	0.47	8.96	0.61	9.01	0.66	9.03	0.76	8.93	0.83	8.7	0.87	8.23	0.88	7.88	0.87				
535	7595	48	27119				24803		24224		22680		20943		19013		16890		15732		13030		9363	
			10.69	0.28	10.92	0.41	11.14	0.54	11.19	0.58	11.27	0.68	11.23	0.75	11.08	0.81	10.78	0.85	10.56	0.86	9.88	0.85	8.55	0.79
Maximum RPM 534.75					Max HP: 10.00				Outlet Area (Sq.Ft.): 17				Wheel Diameter (in): 54.25				Tip Speed: 14.2 x RPM				Max Motor Frame Size: 215T			

Performance certified is for installation type A: Free inlet, Free outlet. Power rating (Bhp) does not include transmission losses. Performance ratings do not include the effects of appurtenances. The sound ratings shown are loudness values in fan sones at 5 ft. (1.5 m) in a hemispherical free field calculated per AMCA Standard 301. Values shown are for installation type A: Free inlet hemispherical sone levels. FEI calculation is based on default motor calculation in accordance with ANS/AMCA Standard 208.

PRD 542-030 BELT DRIVE

RPM	Tip Speed	Max Sones	0.00"SP		0.25"SP		0.50"SP		0.75"SP		1.00"SP		1.25"SP		1.50"SP		1.75"SP		2.00"SP		2.25"SP		2.50"SP	
			CFM		CFM		CFM		CFM		CFM		CFM		CFM		CFM		CFM		CFM		CFM	
			BHP	FEI	BHP	FEI	BHP	FEI	BHP	FEI	BHP	FEI	BHP	FEI	BHP	FEI	BHP	FEI	BHP	FEI	BHP	FEI	BHP	FEI
194	2755	6.9	6210		3239																			
			0.39	1.6	0.38	1.47																		
245	3476	10.9	7192		5455		2304																	
			0.64	1.19	0.68	1.37	0.54	1.1																
296	4198	15.4	8443		7157		5090																	
			1.04	0.89	1.07	1.15	1.05	1.18																
346	4919	19.3	10142		8785		7242		5308															
			1.75	0.65	1.65	0.94	1.73	1.02	1.68	1														
397	5640	24	12136		10967		9700		8148		6486													
			2.92	0.47	2.81	0.7	2.93	0.8	2.97	0.86	2.88	0.86												
448	6361	29	13895		12964		11802		10616		9228		7752		5759									
			4.29	0.37	4.27	0.54	4.42	0.66	4.47	0.74	4.47	0.79	4.37	0.8	4.05	0.75								
499	7082	36	15503		14626		13573		12504		11433		10249		8837		7194							
			5.86	0.3	5.5	0.46	5.84	0.57	5.97	0.66	6.03	0.72	6.02	0.76	5.93	0.77	5.67	0.75						
549	7804	44	17111		16213		15306		14395		13483		12441		11270		10101		8673		6595			
			7.8	0.25	6.96	0.41	7.5	0.5	7.73	0.58	7.85	0.64	7.92	0.69	7.92	0.73	7.85	0.75	7.64	0.74	7.04	0.69		
600	8525	50	18703		17992		17282		16430		15577		14724		13730		12735		11741		10604		9325	
			10.15	0.21	10.31	0.31	10.44	0.4	10.55	0.48	10.64	0.55	10.69	0.6	10.72	0.65	10.72	0.69	10.66	0.71	10.53	0.72	10.27	0.71
651	9246	57	20285		19669		18898		18282		17357		16587		15816		14891		14121		13196		12118	
			12.95	0.18	13.12	0.26	13.29	0.35	13.4	0.41	13.52	0.49	13.6	0.54	13.65	0.59	13.68	0.63	13.68	0.66	13.64	0.68	13.53	0.7
Maximum RPM 651					Max HP: 15.00				Outlet Area (Sq.Ft.): 17				Wheel Diameter (in): 54.25				Tip Speed: 14.2 x RPM				Max Motor Frame Size: 254T			

Performance certified is for installation type A: Free inlet, Free outlet. Power rating (Bhp) does not include transmission losses. Performance ratings do not include the effects of appurtenances. The sound ratings shown are loudness values in fan sones at 5 ft. (1.5 m) in a hemispherical free field calculated per AMCA Standard 301. Values shown are for installation type A: Free inlet hemispherical sone levels. FEI calculation is based on default motor calculation in accordance with ANS/AMCA Standard 208.

PRU 060-100 DIRECT DRIVE

RPM	Tip Speed	Max Sones	0.00"SP		0.12"SP		0.25"SP		0.38"SP		0.50"SP		0.62"SP		0.75"SP		0.88"SP		1.00"SP		1.12"SP		1.25"SP	
			CFM		CFM		CFM		CFM		CFM		CFM		CFM		CFM		CFM		CFM		CFM	
			BHP	FEI	BHP	FEI	BHP	FEI	BHP	FEI	BHP	FEI	BHP	FEI	BHP	FEI	BHP	FEI	BHP	FEI	BHP	FEI	BHP	FEI
350	916	< 0.3	52																					
			0.01	0.77																				
1725	4516	13.4	274		250		228		203		177		144		101									
			0.09	0.85	0.09	0.97	0.09	1.08	0.09	1.18	0.09	1.26	0.09	1.33	0.08	1.39								
1800	4712	14.7	286		263		242		219		194		164		129		83							
			0.10	0.79	0.10	0.90	0.10	1.00	0.10	1.10	0.10	1.19	0.10	1.26	0.10	1.31	0.09	1.38						
2152	5634	21	342		323		304		287		268		245		223		201		174		140		99	
			0.17	0.56	0.17	0.65	0.17	0.74	0.17	0.81	0.17	0.88	0.17	0.95	0.17	1.01	0.17	1.05	0.17	1.09	0.16	1.13	0.15	1.18
Maximum RPM 2152					Max HP: 0.33				Outlet Area (Sq.Ft.): 1.32				Wheel Diameter (in): 10				Tip Speed: 2.62 x RPM				Max Motor Frame Size: 56			

Performance certified is for installation type A: Free inlet, Free outlet. Power rating (Bhp) does not include transmission losses. Performance ratings do not include the effects of appurtenances. The sound ratings shown are loudness values in fan sones at 5 ft. (1.5 m) in a hemispherical free field calculated per AMCA Standard 301. Values shown are for installation type A: Free inlet hemispherical sone levels. FEI calculation is based on default motor calculation in accordance with ANS/AMCA Standard 208.

PRU 070-100 DIRECT DRIVE

RPM	Tip Speed	Max Sones	0.00"SP		0.12"SP		0.25"SP		0.38"SP		0.50"SP		0.62"SP		0.75"SP		0.88"SP		1.00"SP		1.12"SP		1.25"SP	
			CFM		CFM		CFM		CFM		CFM		CFM		CFM		CFM		CFM		CFM		CFM	
			BHP	FEI	BHP	FEI	BHP	FEI	BHP	FEI	BHP	FEI	BHP	FEI	BHP	FEI	BHP	FEI	BHP	FEI	BHP	FEI	BHP	FEI
350	916	< 0.3	102																					
			0.01	0.81																				
1725	4516	13.5	532		498		463		420		373		317		248		132							
			0.10	1.00	0.10	1.14	0.11	1.26	0.11	1.37	0.11	1.45	0.11	1.50	0.10	1.52	0.08	1.54						
1800	4712	14.8	555		524		488		448		407		358		300		219							
			0.11	0.93	0.12	1.06	0.12	1.18	0.12	1.29	0.12	1.37	0.12	1.43	0.12	1.46	0.11	1.48						
2152	5634	21	664		637		610		578		546		514		476		433		385		331		262	
			0.20	0.67	0.20	0.78	0.20	0.88	0.21	0.98	0.21	1.06	0.21	1.12	0.21	1.18	0.21	1.23	0.21	1.26	0.20	1.28	0.19	1.29
Maximum RPM 2152					Max HP: 0.33				Outlet Area (Sq.Ft.): 1.32				Wheel Diameter (in): 10				Tip Speed: 2.62 x RPM				Max Motor Frame Size: 56			

Performance certified is for installation type A: Free inlet, Free outlet. Power rating (Bhp) does not include transmission losses. Performance ratings do not include the effects of appurtenances. The sound ratings shown are loudness values in fan sones at 5 ft. (1.5 m) in a hemispherical free field calculated per AMCA Standard 301. Values shown are for installation type A: Free inlet hemispherical sone levels. FEI calculation is based on default motor calculation in accordance with ANS/AMCA Standard 208.

PRU 080-100 DIRECT DRIVE

RPM	Tip Speed	Max Sones	0.00"SP		0.12"SP		0.25"SP		0.38"SP		0.50"SP		0.75"SP		0.88"SP		1.00"SP		1.12"SP		1.25"SP		1.38"SP	
			CFM		CFM		CFM		CFM		CFM		CFM		CFM		CFM		CFM		CFM		CFM	
			BHP	FEI	BHP	FEI	BHP	FEI	BHP	FEI	BHP	FEI	BHP	FEI	BHP	FEI	BHP	FEI	BHP	FEI	BHP	FEI	BHP	FEI
350	916	< 0.3	133																					
			0.01	0.84																				
1725	4516	13.8	660		623		586		538		490		345		196									
			0.11	1.05	0.11	1.21	0.12	1.33	0.12	1.45	0.12	1.53	0.11	1.63	0.09	1.60								
1800	4712	15.1	689		656		617		572		528		405		310									
			0.12	0.98	0.13	1.12	0.13	1.25	0.13	1.37	0.13	1.46	0.13	1.57	0.12	1.58								
2152	5634	18.9	824		797		764		731		697		617		577		524		458		371		218	
			0.21	0.71	0.22	0.82	0.22	0.94	0.22	1.04	0.23	1.12	0.23	1.27	0.23	1.32	0.23	1.36	0.22	1.39	0.21	1.39	0.18	1.35
Maximum RPM 2152					Max HP: 0.33				Outlet Area (Sq.Ft.): 1.32				Wheel Diameter (in): 10				Tip Speed: 2.62 x RPM				Max Motor Frame Size: 56			

Performance certified is for installation type A: Free inlet, Free outlet. Power rating (Bhp) does not include transmission losses. Performance ratings do not include the effects of appurtenances. The sound ratings shown are loudness values in fan sones at 5 ft. (1.5 m) in a hemispherical free field calculated per AMCA Standard 301. Values shown are for installation type A: Free inlet hemispherical sone levels. FEI calculation is based on default motor calculation in accordance with ANS/AMCA Standard 208.

PRU 100-100 DIRECT DRIVE

RPM	Tip Speed	Max Sones	0.00"SP		0.12"SP		0.25"SP		0.38"SP		0.50"SP		0.62"SP		0.62"SP		0.75"SP		0.88"SP		1.00"SP		1.12"SP	
			CFM		CFM		CFM		CFM		CFM		CFM		CFM		CFM		CFM		CFM		CFM	
			BHP	FEI	BHP	FEI	BHP	FEI	BHP	FEI	BHP	FEI	BHP	FEI	BHP	FEI	BHP	FEI	BHP	FEI	BHP	FEI	BHP	FEI
350	916	< 0.3	185																					
			0.01	0.89																				
1725	4516	15.2	970		902		850		792		734		662		662		565							
			0.14	1.06	0.13	1.31	0.14	1.41	0.15	1.52	0.15	1.61	0.15	1.68	0.15	1.68	0.15	1.72						
1800	4712	16.3	1012		958		903		849		795		734		734		659		557					
			0.16	0.99	0.17	1.12	0.17	1.26	0.18	1.38	0.18	1.48	0.18	1.57	0.18	1.57	0.18	1.63	0.17	1.66				
2032	5320	18.7	1143		1097		1043		997		951		905		905		851		790		721		621	
			0.23	0.80	0.24	0.91	0.25	1.04	0.25	1.15	0.25	1.24	0.25	1.32	0.25	1.32	0.26	1.40	0.26	1.47	0.25	1.51	0.24	1.53
Maximum RPM 2032					Max HP: 0.33				Outlet Area (Sq.Ft.): 1.32				Wheel Diameter (in): 10				Tip Speed: 2.62 x RPM				Max Motor Frame Size: 56			

Performance certified is for installation type A: Free inlet, Free outlet. Power rating (Bhp) does not include transmission losses. Performance ratings do not include the effects of appurtenances. The sound ratings shown are loudness values in fan sones at 5 ft. (1.5 m) in a hemispherical free field calculated per AMCA Standard 301. Values shown are for installation type A: Free inlet hemispherical sone levels. FEI calculation is based on default motor calculation in accordance with ANS/AMCA Standard 208.

PRU 122-100 DIRECT DRIVE

RPM	Tip Speed	Max Sones	0.00"SP		0.12"SP		0.25"SP		0.50"SP		0.62"SP		0.75"SP		0.88"SP		1.00"SP		1.25"SP		1.38"SP		1.50"SP	
			CFM		CFM		CFM		CFM		CFM		CFM		CFM		CFM		CFM		CFM		CFM	
			BHP	FEI	BHP	FEI	BHP	FEI	BHP	FEI	BHP	FEI	BHP	FEI	BHP	FEI	BHP	FEI	BHP	FEI	BHP	FEI	BHP	FEI
350	1122	0.5	343																					
			0.01	1.06																				
900	2886	6.8	905		784		645																	
			0.07	1.68	0.05	2.27	0.05	2.33																
1200	3848	12.5	1228		1130		1034		804		554													
			0.14	1.24	0.13	1.54	0.13	1.71	0.14	1.84	0.12	1.77												
1725	5532	22	1783		1711		1639		1508		1436		1364		1281		1197		910					
			0.39	0.69	0.40	0.79	0.41	0.91	0.43	1.09	0.43	1.17	0.43	1.24	0.43	1.30	0.43	1.34	0.40	1.36				
1800	5773	24	1860		1798		1723		1598		1536		1461		1386		1311		1099		925			
			0.44	0.63	0.46	0.72	0.47	0.84	0.48	1.01	0.49	1.09	0.49	1.17	0.49	1.23	0.49	1.27	0.48	1.33	0.45	1.32		
1845	5917	25	1907		1843		1779		1651		1587		1523		1447		1383		1191		1063		820	
			0.48	0.60	0.49	0.70	0.50	0.79	0.52	0.97	0.52	1.05	0.53	1.12	0.53	1.19	0.53	1.23	0.52	1.30	0.51	1.31	0.46	1.27
Maximum RPM 1845					Max HP: 0.50				Outlet Area (Sq.Ft.): 1.99				Wheel Diameter (in): 12.25				Tip Speed: 3.21 x RPM				Max Motor Frame Size: 56			

Performance certified is for installation type A: Free inlet, Free outlet. Power rating (Bhp) does not include transmission losses. Performance ratings do not include the effects of appurtenances. The sound ratings shown are loudness values in fan sones at 5 ft. (1.5 m) in a hemispherical free field calculated per AMCA Standard 301. Values shown are for installation type A: Free inlet hemispherical sone levels. FEI calculation is based on default motor calculation in accordance with ANS/AMCA Standard 208.

PRU 135-100 DIRECT DRIVE

RPM	Tip Speed	Max Sones	0.00"SP		0.12"SP		0.38"SP		0.50"SP		0.75"SP		0.88"SP		1.00"SP		1.25"SP		1.38"SP		1.62"SP		1.75"SP	
			CFM		CFM		CFM		CFM		CFM		CFM		CFM		CFM		CFM		CFM		CFM	
			BHP	FEI	BHP	FEI	BHP	FEI	BHP	FEI	BHP	FEI	BHP	FEI	BHP	FEI	BHP	FEI	BHP	FEI	BHP	FEI	BHP	FEI
350	1237	0.7	451																					
			0.01	1.18																				
900	3181	7.7	1224		1096		723																	
			0.07	1.94	0.08	2.16	0.08	2.16																
1200	4241	13.2	1654		1565		1366		1244		768													
			0.18	1.24	0.19	1.41	0.20	1.67	0.21	1.75	0.19	1.68												
1725	6097	23	2422		2373		2244		2179		2049		1968		1887		1676		1530					
			0.55	0.63	0.57	0.74	0.60	0.96	0.61	1.05	0.63	1.20	0.63	1.26	0.64	1.32	0.64	1.39	0.63	1.40				
1800	6362	25	2527		2476		2358		2307		2172		2104		2020		1850		1732		1393		869	
			0.63	0.58	0.64	0.69	0.67	0.89	0.69	0.97	0.71	1.13	0.72	1.19	0.72	1.25	0.73	1.33	0.73	1.36	0.70	1.35	0.57	1.22
1845	6521	26	2590		2538		2434		2365		2243		2174		2105		1931		1844		1567		1324	
			0.67	0.55	0.69	0.66	0.72	0.84	0.74	0.94	0.76	1.09	0.77	1.15	0.78	1.21	0.79	1.30	0.79	1.33	0.77	1.35	0.73	1.31
Maximum RPM 1845					Max HP: 1.00				Outlet Area (Sq.Ft.): 1.99				Wheel Diameter (in): 13.5				Tip Speed: 3.53 x RPM				Max Motor Frame Size: 145T			

Performance certified is for installation type A: Free inlet, Free outlet. Power rating (Bhp) does not include transmission losses. Performance ratings do not include the effects of appurtenances. The sound ratings shown are loudness values in fan sones at 5 ft. (1.5 m) in a hemispherical free field calculated per AMCA Standard 301. Values shown are for installation type A: Free inlet hemispherical sone levels. FEI calculation is based on default motor calculation in accordance with ANS/AMCA Standard 208.

PRU 135-080 DIRECT DRIVE

RPM	Tip Speed	Max Sones	0.00"SP		0.12"SP		0.38"SP		0.50"SP		0.75"SP		0.88"SP		1.00"SP		1.25"SP		1.38"SP		1.62"SP		1.75"SP	
			CFM		CFM		CFM		CFM		CFM		CFM		CFM		CFM		CFM		CFM		CFM	
			BHP	FEI	BHP	FEI	BHP	FEI	BHP	FEI	BHP	FEI	BHP	FEI	BHP	FEI	BHP	FEI	BHP	FEI	BHP	FEI	BHP	FEI
350	1237	0.6	437																					
			0.01	0.57																				
900	3181	7.6	1176		1038		713																	
			0.07	1.74	0.07	1.91	0.08	1.94																
1200	4241	13.0	1581		1475		1274		1158															
			0.16	1.18	0.15	1.39	0.2	1.44	0.21	1.46														
1725	6097	23	2282		2236		2102		2042		1905		1843		1767		1582		1474		1029			
			0.52	0.57	0.74	0.5	0.62	0.79	0.62	0.87	0.62	1.03	0.63	1.08	0.63	1.14	0.63	1.23	0.62	1.25	0.55	1.21		
1800	6362	24	2382		2336		2212		2149		2022		1959		1895		1750		1654		1396		1172	
			0.6	0.52	0.87	0.45	0.71	0.72	0.71	0.81	0.71	0.97	0.71	1.03	0.72	1.08	0.72	1.17	0.71	1.21	0.69	1.24	0.65	1.2
Maximum RPM 1800					Max HP: 1.00				Outlet Area (Sq.Ft.): 1.99				Wheel Diameter (in): 13.5				Tip Speed: 3.53 x RPM				Max Motor Frame Size: 145T			

Performance certified is for installation type A: Free inlet, Free outlet. Power rating (Bhp) does not include transmission losses. Performance ratings do not include the effects of appurtenances. The sound ratings shown are loudness values in fan sones at 5 ft. (1.5 m) in a hemispherical free field calculated per AMCA Standard 301. Values shown are for installation type A: Free inlet hemispherical sone levels. FEI calculation is based on default motor calculation in accordance with ANS/AMCA Standard 208.

PRU 150-100 DIRECT DRIVE

RPM	Tip Speed	Max Sones	0.00"SP		0.12"SP		0.25"SP		0.50"SP		0.62"SP		0.75"SP		0.88"SP		1.00"SP		1.25"SP		1.38"SP		1.50"SP	
			CFM		CFM		CFM		CFM		CFM		CFM		CFM		CFM		CFM		CFM		CFM	
			BHP	FEI	BHP	FEI	BHP	FEI	BHP	FEI	BHP	FEI	BHP	FEI	BHP	FEI	BHP	FEI	BHP	FEI	BHP	FEI	BHP	FEI
350	1374	1.1	623																					
			0.01	1.36																				
600	2356	4.8	1098		880																			
			0.03	2.53	0.04	2.59																		
900	3534	9.4	1688		1544		1386		824															
			0.13	1.66	0.13	1.92	0.14	2	0.13	1.89														
1200	4712	16.0	2283		2182		2088		1845		1711		1532		1261									
			0.31	1.01	0.3	1.22	0.32	1.32	0.35	1.52	0.35	1.58	0.35	1.61	0.34	1.57								
1845	7245	31	3553		3506		3434		3315		3244		3173		3101		3030		2887		2792		2697	
			1.14	0.44	1.16	0.51	1.19	0.61	1.23	0.76	1.25	0.84	1.27	0.9	1.28	0.96	1.29	1.02	1.31	1.1	1.32	1.15	1.33	1.18
Maximum RPM 1845					Max HP: 1.50				Outlet Area (Sq.Ft.): 2.46				Wheel Diameter (in): 15				Tip Speed: 3.93 x RPM				Max Motor Frame Size: 145T			

Performance certified is for installation type A: Free inlet, Free outlet. Power rating (Bhp) does not include transmission losses. Performance ratings do not include the effects of appurtenances. The sound ratings shown are loudness values in fan sones at 5 ft. (1.5 m) in a hemispherical free field calculated per AMCA Standard 301. Values shown are for installation type A: Free inlet hemispherical sone levels. FEI calculation is based on default motor calculation in accordance with ANS/AMCA Standard 208.

PRU 150-080 DIRECT DRIVE

RPM	Tip Speed	Max Sones	0.00"SP		0.25"SP		0.38"SP		0.62"SP		0.75"SP		1.00"SP		1.12"SP		1.38"SP		1.50"SP		1.75"SP		1.88"SP	
			CFM		CFM		CFM		CFM		CFM		CFM		CFM		CFM		CFM		CFM		CFM	
			BHP	FEI	BHP	FEI	BHP	FEI	BHP	FEI	BHP	FEI	BHP	FEI	BHP	FEI	BHP	FEI	BHP	FEI	BHP	FEI	BHP	FEI
350	1374	1.1	604																					
			0.01	0.65																				
600	2356	4.7	1064																					
			0.03	2.32																				
900	3534	9.3	1619		1319		1148																	
			0.11	1.52	0.13	1.71	0.14	1.71																
1200	4712	15.8	2173		1958		1856		1623		1478													
			0.27	0.94	0.32	1.14	0.34	1.21	0.36	1.31	0.36	1.35												
1937	7607	32	3517		3399		3329		3187		3140		2999		2928		2810		2716		2551		2457	
			1.27	0.36	1.31	0.49	1.34	0.56	1.38	0.7	1.39	0.74	1.42	0.85	1.43	0.9	1.44	0.97	1.45	1.02	1.46	1.08	1.46	1.1
Maximum RPM 1937					Max HP: 1.50				Outlet Area (Sq.Ft.): 2.46				Wheel Diameter (in): 15				Tip Speed: 3.93 x RPM				Max Motor Frame Size: 145T			

Performance certified is for installation type A: Free inlet, Free outlet. Power rating (Bhp) does not include transmission losses. Performance ratings do not include the effects of appurtenances. The sound ratings shown are loudness values in fan sones at 5 ft. (1.5 m) in a hemispherical free field calculated per AMCA Standard 301. Values shown are for installation type A: Free inlet hemispherical sone levels. FEI calculation is based on default motor calculation in accordance with ANS/AMCA Standard 208.

PRU 150-050 DIRECT DRIVE

RPM	Tip Speed	Max Sones	0.00"SP		0.25"SP		0.50"SP		0.75"SP		1.00"SP		1.25"SP		1.38"SP		1.62"SP		1.88"SP		2.12"SP		2.38"SP	
			CFM		CFM		CFM		CFM		CFM		CFM		CFM		CFM		CFM		CFM		CFM	
			BHP	FEI	BHP	FEI	BHP	FEI	BHP	FEI	BHP	FEI	BHP	FEI	BHP	FEI	BHP	FEI	BHP	FEI	BHP	FEI	BHP	FEI
350	1374	0.9	403																					
			0.04	1.50																				
900	3534	8.4	1112		855		491																	
			0.11	1.40	0.11	1.71	0.11	1.59																
1200	4712	14.4	1515		1320		1119		883															
			0.17	1.22	0.18	1.56	0.18	1.80	0.19	1.86														
1725	6774	25	2226		2104		1982		1842		1684		1510		1422		1212		933					
			0.35	0.88	0.37	1.19	0.39	1.42	0.41	1.59	0.43	1.72	0.44	1.80	0.44	1.82	0.44	1.84	0.42	1.77				
1800	7069	27	2323		2214		2086		1958		1812		1648		1575		1393		1174		864			
			0.40	0.81	0.42	1.09	0.44	1.34	0.46	1.51	0.48	1.64	0.50	1.73	0.50	1.76	0.50	1.80	0.49	1.79	0.46	1.68		
2122	8333	34	2739		2653		2545		2438		2309		2201		2137		2008		1879		1728		1556	
			0.66	0.59	0.68	0.80	0.70	1.02	0.73	1.19	0.75	1.34	0.78	1.44	0.79	1.49	0.81	1.57	0.82	1.62	0.83	1.66	0.82	1.67
Maximum RPM 2122					Max HP: 1.50				Outlet Area (Sq.Ft.): 2.46				Wheel Diameter (in): 15				Tip Speed: 3.93 x RPM				Max Motor Frame Size: 145T			

Performance certified is for installation type A: Free inlet, Free outlet. Power rating (Bhp) does not include transmission losses. Performance ratings do not include the effects of appurtenances. The sound ratings shown are loudness values in fan sones at 5 ft. (1.5 m) in a hemispherical free field calculated per AMCA Standard 301. Values shown are for installation type A: Free inlet hemispherical sone levels. FEI calculation is based on default motor calculation in accordance with ANS/AMCA Standard 208.

PRU 165-100 DIRECT DRIVE

RPM	Tip Speed	Max Sones	0.00"SP		0.12"SP		0.25"SP		0.50"SP		0.62"SP		0.75"SP		0.88"SP		1.00"SP		1.25"SP		1.38"SP		1.50"SP	
			CFM		CFM		CFM		CFM		CFM		CFM		CFM		CFM		CFM		CFM		CFM	
			BHP	FEI	BHP	FEI	BHP	FEI	BHP	FEI	BHP	FEI	BHP	FEI	BHP	FEI	BHP	FEI	BHP	FEI	BHP	FEI	BHP	FEI
350	1512	1.5	833																					
			0.01	1.58																				
600	2592	5.9	1471		1234		858																	
			0.06	2.51	0.06	2.58	0.07	2.41																
900	3888	11.3	2256		2092		1941		1504															
			0.21	1.39	0.2	1.68	0.22	1.76	0.23	1.83														
1075	4644	16.3	2720		2600		2470		2181		2003		1790		1378									
			0.36	1.01	0.35	1.21	0.38	1.33	0.4	1.52	0.41	1.57	0.41	1.59	0.38	1.52								
1200	5184	19.1	3053		2936		2832		2587		2445		2304		2102		1840							
			0.5	0.82	0.46	1.06	0.5	1.14	0.55	1.33	0.56	1.4	0.57	1.45	0.57	1.48	0.56	1.47						
1805	7797	36	4627		4565		4503		4379		4286		4224		4131		4069		3883		3790		3697	
			1.72	0.37	1.75	0.44	1.78	0.51	1.83	0.64	1.87	0.72	1.89	0.77	1.91	0.84	1.93	0.88	1.96	0.98	1.98	1.03	1.99	1.06
Maximum RPM 1805					Max HP: 3.00				Outlet Area (Sq.Ft.): 2.94				Wheel Diameter (in): 16.5				Tip Speed: 4.32 x RPM				Max Motor Frame Size: 145T			

Performance certified is for installation type A: Free inlet, Free outlet. Power rating (Bhp) does not include transmission losses. Performance ratings do not include the effects of appurtenances. The sound ratings shown are loudness values in fan sones at 5 ft. (1.5 m) in a hemispherical free field calculated per AMCA Standard 301. Values shown are for installation type A: Free inlet hemispherical sone levels. FEI calculation is based on default motor calculation in accordance with ANS/AMCA Standard 208.

PRU 165-080 DIRECT DRIVE

RPM	Tip Speed	Max Sones	0.00"SP		0.25"SP		0.38"SP		0.62"SP		0.75"SP		1.00"SP		1.12"SP		1.38"SP		1.50"SP		1.75"SP		1.88"SP	
			CFM		CFM		CFM		CFM		CFM		CFM		CFM		CFM		CFM		CFM		CFM	
			BHP	FEI	BHP	FEI	BHP	FEI	BHP	FEI	BHP	FEI	BHP	FEI	BHP	FEI	BHP	FEI	BHP	FEI	BHP	FEI	BHP	FEI
350	1512	1.5	809																					
			0.01	0.76																				
600	2592	5.8	1421		846																			
			0.06	2.19	0.06	2.31																		
900	3888	11.1	2160		1830		1657		908															
			0.18	1.31	0.21	1.52	0.23	1.53	0.17	1.64														
1200	5184	18.8	2894		2674		2559		2326		2190		1820		1470									
			0.46	0.76	0.53	0.93	0.54	1.03	0.57	1.17	0.58	1.22	0.57	1.29	0.51	1.29								
1895	8186	39	4580		4426		4365		4212		4150		3997		3936		3782		3690		3537		3445	
			1.91	0.31	1.98	0.43	2.01	0.48	2.06	0.6	2.08	0.65	2.12	0.75	2.13	0.79	2.16	0.87	2.17	0.91	2.19	0.97	2.2	1
Maximum RPM 1895					Max HP: 3.00				Outlet Area (Sq.Ft.): 2.94				Wheel Diameter (in): 16.5				Tip Speed: 4.32 x RPM				Max Motor Frame Size: 145T			

Performance certified is for installation type A: Free inlet, Free outlet. Power rating (Bhp) does not include transmission losses. Performance ratings do not include the effects of appurtenances. The sound ratings shown are loudness values in fan sones at 5 ft. (1.5 m) in a hemispherical free field calculated per AMCA Standard 301. Values shown are for installation type A: Free inlet hemispherical sone levels. FEI calculation is based on default motor calculation in accordance with ANS/AMCA Standard 208.

PRU 165-050 DIRECT DRIVE

RPM	Tip Speed	Max Sones	0.00"SP		0.25"SP		0.62"SP		0.88"SP		1.12"SP		1.50"SP		1.75"SP		2.00"SP		2.25"SP		2.62"SP		2.88"SP	
			CFM		CFM		CFM		CFM		CFM		CFM		CFM		CFM		CFM		CFM		CFM	
			BHP	FEI	BHP	FEI	BHP	FEI	BHP	FEI	BHP	FEI	BHP	FEI	BHP	FEI	BHP	FEI	BHP	FEI	BHP	FEI	BHP	FEI
350	1512	1.3	541																					
			0.05	1.55																				
600	2592	5.2	960		522																			
			0.10	1.40	0.10	1.42																		
900	3888	10.1	1491		1198		596																	
			0.15	1.33	0.15	1.67	0.16	1.52																
1200	5184	17.1	2030		1814		1478		1203		792													
			0.24	1.13	0.25	1.49	0.27	1.78	0.27	1.83	0.27	1.64												
2076	8968	39	3566		3454		3286		3174		3034		2838		2698		2558		2390		2110		1914	
			0.99	0.50	1.02	0.71	1.06	0.97	1.09	1.10	1.13	1.24	1.18	1.38	1.20	1.45	1.22	1.50	1.24	1.55	1.24	1.59	1.23	1.59
Maximum RPM 2076					Max HP: 3.00				Outlet Area (Sq.Ft.): 2.94				Wheel Diameter (in): 16.5				Tip Speed: 4.32 x RPM				Max Motor Frame Size: 145T			

Performance certified is for installation type A: Free inlet, Free outlet. Power rating (Bhp) does not include transmission losses. Performance ratings do not include the effects of appurtenances. The sound ratings shown are loudness values in fan sones at 5 ft. (1.5 m) in a hemispherical free field calculated per AMCA Standard 301. Values shown are for installation type A: Free inlet hemispherical sone levels. FEI calculation is based on default motor calculation in accordance with ANS/AMCA Standard 208.

PRU 182-100 DIRECT DRIVE

RPM	Tip Speed	Max Sones	0.00"SP		0.12"SP		0.38"SP		0.50"SP		0.62"SP		0.88"SP		1.00"SP		1.12"SP		1.25"SP		1.50"SP		1.62"SP	
			CFM		CFM		CFM		CFM		CFM		CFM		CFM		CFM		CFM		CFM		CFM	
			BHP	FEI	BHP	FEI	BHP	FEI	BHP	FEI	BHP	FEI	BHP	FEI	BHP	FEI	BHP	FEI	BHP	FEI	BHP	FEI	BHP	FEI
350	1672	1.9	1168																					
			0.04	2.53																				
600	2867	6.8	2054		1794																			
			0.1	2.17	0.1	2.47																		
900	4300	13.5	3220		3031		2662		2432		2146													
			0.38	1.09	0.33	1.44	0.37	1.67	0.39	1.7	0.4	1.7												
1075	5136	19.1	3905		3734		3432		3279		3104		2668		2301									
			0.64	0.8	0.61	1	0.65	1.25	0.66	1.34	0.68	1.41	0.7	1.48	0.68	1.48								
1565	7477	34	5837		5699		5473		5343		5246		5019		4922		4793		4696		4404		4275	
			2.04	0.38	1.63	0.56	1.91	0.67	1.98	0.74	2.02	0.8	2.1	0.91	2.13	0.96	2.16	1.01	2.18	1.04	2.22	1.12	2.23	1.14
Maximum RPM 1565					Max HP: 3.00				Outlet Area (Sq.Ft.): 3.59				Wheel Diameter (in): 18.25				Tip Speed: 4.78 x RPM				Max Motor Frame Size: 184T			

Performance certified is for installation type A: Free inlet, Free outlet. Power rating (Bhp) does not include transmission losses. Performance ratings do not include the effects of appurtenances. The sound ratings shown are loudness values in fan sones at 5 ft. (1.5 m) in a hemispherical free field calculated per AMCA Standard 301. Values shown are for installation type A: Free inlet hemispherical sone levels. FEI calculation is based on default motor calculation in accordance with ANS/AMCA Standard 208.

PRU 182-080 DIRECT DRIVE

RPM	Tip Speed	Max Sones	0.00"SP		0.25"SP		0.50"SP		0.75"SP		1.00"SP		1.38"SP		1.62"SP		1.88"SP		2.12"SP		2.38"SP		2.62"SP	
			CFM		CFM		CFM		CFM		CFM		CFM		CFM		CFM		CFM		CFM		CFM	
			BHP	FEI	BHP	FEI	BHP	FEI	BHP	FEI	BHP	FEI	BHP	FEI	BHP	FEI	BHP	FEI	BHP	FEI	BHP	FEI	BHP	FEI
350	1672	1.9	1131																					
			0.04	2.33																				
600	2867	6.6	1961		1404																			
			0.09	2.02	0.09	2.28																		
900	4300	13.2	3014		2680		2313		1627															
			0.28	1.19	0.29	1.56	0.32	1.71	0.31	1.67														
1075	5136	18.8	3632		3351		3088		2762		2276													
			0.5	0.85	0.51	1.17	0.55	1.35	0.58	1.47	0.58	1.51												
1643	7850	37	5566		5411		5225		5070		4915		4636		4451		4234		3955		3614		2964	
			1.94	0.35	2	0.5	2.07	0.65	2.13	0.76	2.18	0.86	2.26	1	2.3	1.07	2.32	1.13	2.33	1.18	2.29	1.21	2.12	1.19
Maximum RPM 1643					Max HP: 3.00				Outlet Area (Sq.Ft.): 3.59				Wheel Diameter (in): 18.25				Tip Speed: 4.78 x RPM				Max Motor Frame Size: 184T			

Performance certified is for installation type A: Free inlet, Free outlet. Power rating (Bhp) does not include transmission losses. Performance ratings do not include the effects of appurtenances. The sound ratings shown are loudness values in fan sones at 5 ft. (1.5 m) in a hemispherical free field calculated per AMCA Standard 301. Values shown are for installation type A: Free inlet hemispherical sone levels. FEI calculation is based on default motor calculation in accordance with ANS/AMCA Standard 208.

PRU 182-050 DIRECT DRIVE

RPM	Tip Speed	Max Sones	0.00"SP		0.38"SP		0.62"SP		1.00"SP		1.25"SP		1.62"SP		2.00"SP		2.25"SP		2.62"SP		2.88"SP		3.25"SP	
			CFM		CFM		CFM		CFM		CFM		CFM		CFM		CFM		CFM		CFM		CFM	
			BHP	FEI	BHP	FEI	BHP	FEI	BHP	FEI	BHP	FEI	BHP	FEI	BHP	FEI	BHP	FEI	BHP	FEI	BHP	FEI	BHP	FEI
350	1672	1.6	811																					
			0.03	2																				
600	2867	6.0	1429																					
			0.07	1.86																				
900	4300	12.0	2141		1726		1402																	
			0.18	1.29	0.22	1.62	0.23	1.75																
1075	5136	17.1	2564		2196		1955		1458															
			0.3	0.99	0.34	1.35	0.36	1.51	0.37	1.59														
1200	5733	20	2878		2529		2318		1952		1605													
			0.42	0.81	0.45	1.19	0.49	1.33	0.52	1.46	0.52	1.46												
1800	8600	39	4320		4059		3915		3712		3596		3393		3162		3017		2756		2525		1975	
			1.47	0.37	1.62	0.57	1.69	0.68	1.78	0.83	1.81	0.9	1.87	1.02	1.91	1.11	1.93	1.16	1.95	1.2	1.94	1.21	1.84	1.15
Maximum RPM 1800					Max HP: 3.00				Outlet Area (Sq.Ft.): 3.59				Wheel Diameter (in): 18.25				Tip Speed: 4.78 x RPM				Max Motor Frame Size: 184T			

Performance certified is for installation type A: Free inlet, Free outlet. Power rating (Bhp) does not include transmission losses. Performance ratings do not include the effects of appurtenances. The sound ratings shown are loudness values in fan sones at 5 ft. (1.5 m) in a hemispherical free field calculated per AMCA Standard 301. Values shown are for installation type A: Free inlet hemispherical sone levels. FEI calculation is based on default motor calculation in accordance with ANS/AMCA Standard 208.

PRU 200-100 DIRECT DRIVE

RPM	Tip Speed	Max Sones	0.00"SP		0.12"SP		0.38"SP		0.50"SP		0.75"SP		0.88"SP		1.00"SP		1.25"SP		1.38"SP		1.62"SP		1.75"SP	
			CFM		CFM		CFM		CFM		CFM		CFM		CFM		CFM		CFM		CFM		CFM	
			BHP	FEI	BHP	FEI	BHP	FEI	BHP	FEI	BHP	FEI	BHP	FEI	BHP	FEI	BHP	FEI	BHP	FEI	BHP	FEI	BHP	FEI
350	1833	2.5	1545		895																			
			0.05	2.66	0.05	2.31																		
600	3142	8.2	2711		2426		1447																	
			0.16	1.98	0.15	2.33	0.17	2.05																
900	4712	16.0	4282		4066		3639		3425		2855		2213											
			0.62	0.89	0.52	1.22	0.58	1.46	0.61	1.52	0.64	1.55	0.58	1.52										
1325	6938	31	6463		6285		5998		5856		5572		5430		5289		4970		4792		4330		4009	
			1.91	0.44	1.68	0.61	1.88	0.74	1.93	0.81	2.01	0.95	2.05	1	2.07	1.05	2.11	1.14	2.13	1.17	2.12	1.22	2.08	1.23
Maximum RPM 1325					Max HP: 5.00				Outlet Area (Sq.Ft.): 4.31				Wheel Diameter (in): 20				Tip Speed: 5.24 x RPM				Max Motor Frame Size: 184T			

Performance certified is for installation type A: Free inlet, Free outlet. Power rating (Bhp) does not include transmission losses. Performance ratings do not include the effects of appurtenances. The sound ratings shown are loudness values in fan sones at 5 ft. (1.5 m) in a hemispherical free field calculated per AMCA Standard 301. Values shown are for installation type A: Free inlet hemispherical sone levels. FEI calculation is based on default motor calculation in accordance with ANS/AMCA Standard 208.

PRU 200-080 DIRECT DRIVE

RPM	Tip Speed	Max Sones	0.00"SP		0.25"SP		0.38"SP		0.62"SP		0.88"SP		1.12"SP		1.25"SP		1.50"SP		1.75"SP		1.88"SP		2.12"SP	
			CFM		CFM		CFM		CFM		CFM		CFM		CFM		CFM		CFM		CFM		CFM	
			BHP	FEI	BHP	FEI	BHP	FEI	BHP	FEI	BHP	FEI	BHP	FEI	BHP	FEI	BHP	FEI	BHP	FEI	BHP	FEI	BHP	FEI
350	1833	2.5	1492																					
			0.05	2.43																				
600	3142	8.0	2585		2008		1506																	
			0.13	1.87	0.14	2.22	0.14	2.11																
1391	7283	33	6204		6003		5905		5708		5475		5240		5139		4867		4556		4382		3889	
			1.85	0.4	2.25	0.5	2.17	0.59	2.14	0.74	2.17	0.88	2.2	0.99	2.22	1.03	2.24	1.12	2.25	1.18	2.25	1.21	2.19	1.23
Maximum RPM 1391					Max HP: 5.00				Outlet Area (Sq.Ft.): 4.31				Wheel Diameter (in): 20				Tip Speed: 5.24 x RPM				Max Motor Frame Size: 184T			

Performance certified is for installation type A: Free inlet, Free outlet. Power rating (Bhp) does not include transmission losses. Performance ratings do not include the effects of appurtenances. The sound ratings shown are loudness values in fan sones at 5 ft. (1.5 m) in a hemispherical free field calculated per AMCA Standard 301. Values shown are for installation type A: Free inlet hemispherical sone levels. FEI calculation is based on default motor calculation in accordance with ANS/AMCA Standard 208.

PRU 200-050 DIRECT DRIVE

RPM	Tip Speed	Max Sones	0.00"SP		0.25"SP		0.62"SP		0.88"SP		1.12"SP		1.50"SP		1.75"SP		2.00"SP		2.25"SP		2.62"SP		2.88"SP	
			CFM		CFM		CFM		CFM		CFM		CFM		CFM		CFM		CFM		CFM		CFM	
			BHP	FEI	BHP	FEI	BHP	FEI	BHP	FEI	BHP	FEI	BHP	FEI	BHP	FEI	BHP	FEI	BHP	FEI	BHP	FEI	BHP	FEI
350	1833	2.1	1073																					
			0.04	2.09																				
600	3142	7.3	1887		1406																			
			0.11	1.73	0.12	1.94																		
900	4712	14.3	2814		2516		2046		1609															
			0.28	1.14	0.34	1.3	0.35	1.63	0.34	1.66														
1075	5629	20	3390		3095		2710		2415		2052													
			0.48	0.82	0.49	1.12	0.56	1.35	0.59	1.44	0.6	1.47												
1533	8027	35	4843		4656		4365		4206		4048		3765		3607		3386		3163		2746		2291	
			1.44	0.42	1.87	0.47	1.8	0.71	1.82	0.82	1.85	0.91	1.9	1.05	1.92	1.11	1.94	1.17	1.95	1.2	1.93	1.21	1.85	1.17
Maximum RPM 1533					Max HP: 5.00				Outlet Area (Sq.Ft.): 4.31				Wheel Diameter (in): 20				Tip Speed: 5.24 x RPM				Max Motor Frame Size: 184T			

Performance certified is for installation type A: Free inlet, Free outlet. Power rating (Bhp) does not include transmission losses. Performance ratings do not include the effects of appurtenances. The sound ratings shown are loudness values in fan sones at 5 ft. (1.5 m) in a hemispherical free field calculated per AMCA Standard 301. Values shown are for installation type A: Free inlet hemispherical sone levels. FEI calculation is based on default motor calculation in accordance with ANS/AMCA Standard 208.

PRU 222-100 DIRECT DRIVE

RPM	Tip Speed	Max Sones	0.00"SP		0.25"SP		0.38"SP		0.62"SP		0.75"SP		1.00"SP		1.25"SP		1.38"SP		1.62"SP		1.75"SP		2.00"SP	
			CFM		CFM		CFM		CFM		CFM		CFM		CFM		CFM		CFM		CFM		CFM	
			BHP	FEI	BHP	FEI	BHP	FEI	BHP	FEI	BHP	FEI	BHP	FEI	BHP	FEI	BHP	FEI	BHP	FEI	BHP	FEI	BHP	FEI
350	2039	3.3	2140																					
			0.08	2.7																				
600	3495	10.2	3781		3157		2723																	
			0.27	1.63	0.28	2.06	0.31	2.02																
1250	7281	35	8430		8049		7862		7535		7396		7023		6650		6464		5998		5718		4925	
			2.78	0.39	2.53	0.61	2.65	0.68	2.8	0.81	2.84	0.86	2.94	0.97	3.01	1.06	3.03	1.09	3.06	1.15	3.05	1.17	2.93	1.18
Maximum RPM 1250					Max HP: 5.00				Outlet Area (Sq.Ft.): 5.36				Wheel Diameter (in): 22.25				Tip Speed: 5.83 x RPM				Max Motor Frame Size: 184T			

Performance certified is for installation type A: Free inlet, Free outlet. Power rating (Bhp) does not include transmission losses. Performance ratings do not include the effects of appurtenances. The sound ratings shown are loudness values in fan sones at 5 ft. (1.5 m) in a hemispherical free field calculated per AMCA Standard 301. Values shown are for installation type A: Free inlet hemispherical sone levels. FEI calculation is based on default motor calculation in accordance with ANS/AMCA Standard 208.

PRU 222-080 DIRECT DRIVE

RPM	Tip Speed	Max Sones	0.00"SP		0.25"SP		0.50"SP		0.75"SP		1.00"SP		1.25"SP		1.38"SP		1.62"SP		1.88"SP		2.12"SP		2.38"SP	
			CFM		CFM		CFM		CFM		CFM		CFM		CFM		CFM		CFM		CFM		CFM	
			BHP	FEI	BHP	FEI	BHP	FEI	BHP	FEI	BHP	FEI	BHP	FEI	BHP	FEI	BHP	FEI	BHP	FEI	BHP	FEI	BHP	FEI
350	2039	3.2	2059																					
			0.07	2.46																				
1313	7648	37	8061		7853		7601		7347		7090		6829		6698		6390		6033		5624		5025	
			2.66	0.36	3.43	0.42	3.15	0.6	3.13	0.74	3.17	0.85	3.21	0.95	3.23	0.99	3.26	1.07	3.28	1.13	3.27	1.18	3.18	1.19
Maximum RPM 1313					Max HP: 5.00				Outlet Area (Sq.Ft.): 5.36				Wheel Diameter (in): 22.25				Tip Speed: 5.83 x RPM				Max Motor Frame Size: 184T			

Performance certified is for installation type A: Free inlet, Free outlet. Power rating (Bhp) does not include transmission losses. Performance ratings do not include the effects of appurtenances. The sound ratings shown are loudness values in fan sones at 5 ft. (1.5 m) in a hemispherical free field calculated per AMCA Standard 301. Values shown are for installation type A: Free inlet hemispherical sone levels. FEI calculation is based on default motor calculation in accordance with ANS/AMCA Standard 208.

PRU 222-050 DIRECT DRIVE

RPM	Tip Speed	Max Sones	0.00"SP		0.38"SP		0.62"SP		1.00"SP		1.25"SP		1.62"SP		2.00"SP		2.25"SP		2.62"SP		2.88"SP		3.25"SP	
			CFM		CFM		CFM		CFM		CFM		CFM		CFM		CFM		CFM		CFM		CFM	
			BHP	FEI	BHP	FEI	BHP	FEI	BHP	FEI	BHP	FEI	BHP	FEI	BHP	FEI	BHP	FEI	BHP	FEI	BHP	FEI	BHP	FEI
350	2039	2.9	1571																					
			0.06	2.17																				
600	3495	9.0	3111		2259																			
			0.21	1.51	0.25	1.81																		
900	5243	17.4	5714		5054		4672		4023		3450													
			0.91	0.72	0.95	1.1	1.03	1.23	1.11	1.36	1.13	1.37												
1438	8376	39	10270		9788		9513		9169		8893		8549		8205		7930		7585		7310		6828	
			4.6	0.27	5	0.42	5.19	0.52	5.4	0.63	5.54	0.72	5.7	0.82	5.82	0.9	5.91	0.96	5.99	1.02	6.05	1.06	6.1	1.1
Maximum RPM 1438					Max HP: 5.00				Outlet Area (Sq.Ft.): 5.36				Wheel Diameter (in): 22.25				Tip Speed: 5.83 x RPM				Max Motor Frame Size: 184T			

Performance certified is for installation type A: Free inlet, Free outlet. Power rating (Bhp) does not include transmission losses. Performance ratings do not include the effects of appurtenances. The sound ratings shown are loudness values in fan sones at 5 ft. (1.5 m) in a hemispherical free field calculated per AMCA Standard 301. Values shown are for installation type A: Free inlet hemispherical sone levels. FEI calculation is based on default motor calculation in accordance with ANS/AMCA Standard 208.

PRU 245-100 DIRECT DRIVE

RPM	Tip Speed	Max Sones	0.00"SP		0.12"SP		0.25"SP		0.50"SP		0.62"SP		0.75"SP		0.88"SP		1.00"SP		1.25"SP		1.38"SP		1.50"SP	
			CFM		CFM		CFM		CFM		CFM		CFM		CFM		CFM		CFM		CFM		CFM	
			BHP	FEI	BHP	FEI	BHP	FEI	BHP	FEI	BHP	FEI	BHP	FEI	BHP	FEI	BHP	FEI	BHP	FEI	BHP	FEI	BHP	FEI
400	2566	5.8	3428		2940		2147																	
			0.16	2.34	0.17	2.5	0.16	2.48																
1175	7537	34	10265		10093		9921		9578		9406		9234		9063		8891		8490		8318		8089	
			3.81	0.34	3.85	0.42	3.89	0.5	3.98	0.64	4.02	0.7	4.06	0.76	4.1	0.81	4.14	0.86	4.21	0.96	4.24	0.99	4.26	1.03
Maximum RPM 1175					Max HP: 5.00				Outlet Area (Sq.Ft.): 5.36				Wheel Diameter (in): 24.5				Tip Speed: 6.41 x RPM				Max Motor Frame Size: 215T			

Performance certified is for installation type A: Free inlet, Free outlet. Power rating (Bhp) does not include transmission losses. Performance ratings do not include the effects of appurtenances. The sound ratings shown are loudness values in fan sones at 5 ft. (1.5 m) in a hemispherical free field calculated per AMCA Standard 301. Values shown are for installation type A: Free inlet hemispherical sone levels. FEI calculation is based on default motor calculation in accordance with ANS/AMCA Standard 208.

PRU 245-080 DIRECT DRIVE

RPM	Tip Speed	Max Sones	0.00"SP		0.25"SP		0.38"SP		0.62"SP		0.88"SP		1.12"SP		1.25"SP		1.50"SP		1.75"SP		1.88"SP		2.12"SP	
			CFM		CFM		CFM		CFM		CFM		CFM		CFM		CFM		CFM		CFM		CFM	
			BHP	FEI	BHP	FEI	BHP	FEI	BHP	FEI	BHP	FEI	BHP	FEI	BHP	FEI	BHP	FEI	BHP	FEI	BHP	FEI	BHP	FEI
400	2566	5.8	3398		2110																			
			0.14	2.62	0.16	2.47																		
1234	7915	37	10119		9837		9724		9442		9161		8822		8653		8315		7977		7752		7244	
			3.79	0.34	3.9	0.49	3.95	0.55	4.05	0.68	4.15	0.8	4.25	0.91	4.29	0.96	4.37	1.04	4.42	1.1	4.44	1.13	4.46	1.17
Maximum RPM 1234					Max HP: 7.50				Outlet Area (Sq.Ft.): 5.36				Wheel Diameter (in): 24.5				Tip Speed: 6.41 x RPM				Max Motor Frame Size: 215T			

Performance certified is for installation type A: Free inlet, Free outlet. Power rating (Bhp) does not include transmission losses. Performance ratings do not include the effects of appurtenances. The sound ratings shown are loudness values in fan sones at 5 ft. (1.5 m) in a hemispherical free field calculated per AMCA Standard 301. Values shown are for installation type A: Free inlet hemispherical sone levels. FEI calculation is based on default motor calculation in accordance with ANS/AMCA Standard 208.

PRU 245-050 DIRECT DRIVE

RPM	Tip Speed	Max Sones	0.00"SP		0.25"SP		0.50"SP		0.62"SP		0.88"SP		1.12"SP		1.38"SP		1.62"SP		1.75"SP		2.00"SP		2.25"SP	
			CFM		CFM		CFM		CFM		CFM		CFM		CFM		CFM		CFM		CFM		CFM	
			BHP	FEI	BHP	FEI	BHP	FEI	BHP	FEI	BHP	FEI	BHP	FEI	BHP	FEI	BHP	FEI	BHP	FEI	BHP	FEI	BHP	FEI
400	2566	5.2	2258		1220																			
			0.09	2.67	0.1	2.29																		
1185	7601	31	6663		6391		6119		6002		5691		5419		5069		4719		4525		4058		3436	
			2.06	0.42	2.16	0.59	2.26	0.73	2.3	0.78	2.39	0.9	2.45	0.98	2.51	1.06	2.54	1.11	2.55	1.13	2.53	1.14	2.43	1.13
Maximum RPM 1185					Max HP: 10.00				Outlet Area (Sq.Ft.): 5.36				Wheel Diameter (in): 24.5				Tip Speed: 6.41 x RPM				Max Motor Frame Size: 215T			

Performance certified is for installation type A: Free inlet, Free outlet. Power rating (Bhp) does not include transmission losses. Performance ratings do not include the effects of appurtenances. The sound ratings shown are loudness values in fan sones at 5 ft. (1.5 m) in a hemispherical free field calculated per AMCA Standard 301. Values shown are for installation type A: Free inlet hemispherical sone levels. FEI calculation is based on default motor calculation in accordance with ANS/AMCA Standard 208.

PRU 245-030 DIRECT DRIVE

RPM	Tip Speed	Max Sones	0.00"SP		0.38"SP		0.88"SP		1.25"SP		1.75"SP		2.12"SP		2.50"SP		3.00"SP		3.38"SP		3.88"SP		4.25"SP	
			CFM		CFM		CFM		CFM		CFM		CFM		CFM		CFM		CFM		CFM		CFM	
			BHP	FEI	BHP	FEI	BHP	FEI	BHP	FEI	BHP	FEI	BHP	FEI	BHP	FEI	BHP	FEI	BHP	FEI	BHP	FEI	BHP	FEI
400	2566	4.6	1504																					
			0.05	2.68																				
1783	11436	56	6667		6489		6267		6045		5778		5556		5334		4978		4756		4401		4089	
			4.29	0.21	4.45	0.35	4.62	0.5	4.77	0.61	4.93	0.73	5.05	0.8	5.15	0.86	5.29	0.94	5.37	0.97	5.46	1	5.51	1.02
Maximum RPM 1783					Max HP: 7.50				Outlet Area (Sq.Ft.): 5.36				Wheel Diameter (in): 24.5				Tip Speed: 6.41 x RPM				Max Motor Frame Size: 215T			

Performance certified is for installation type A: Free inlet, Free outlet. Power rating (Bhp) does not include transmission losses. Performance ratings do not include the effects of appurtenances. The sound ratings shown are loudness values in fan sones at 5 ft. (1.5 m) in a hemispherical free field calculated per AMCA Standard 301. Values shown are for installation type A: Free inlet hemispherical sone levels. FEI calculation is based on default motor calculation in accordance with ANS/AMCA Standard 208.

PRU 270-100 DIRECT DRIVE

RPM	Tip Speed	Max Sones	0.00"SP		0.12"SP		0.25"SP		0.50"SP		0.62"SP		0.75"SP		0.88"SP		1.00"SP		1.25"SP		1.38"SP		1.50"SP	
			CFM		CFM		CFM		CFM		CFM		CFM		CFM		CFM		CFM		CFM		CFM	
			BHP	FEI	BHP	FEI	BHP	FEI	BHP	FEI	BHP	FEI	BHP	FEI	BHP	FEI	BHP	FEI	BHP	FEI	BHP	FEI	BHP	FEI
400	2566	7.0	3428		2940		2147																	
			0.16	2.34	0.17	2.5	0.16	2.48																
1103	7075	37	9636		9475		9313		8937		8722		8561		8346		8131		7701		7486		7218	
			3.15	0.38	3.18	0.47	3.22	0.54	3.3	0.7	3.35	0.78	3.38	0.84	3.42	0.9	3.46	0.95	3.51	1.04	3.53	1.07	3.54	1.11
Maximum RPM 1103					Max HP: 10.00				Outlet Area (Sq.Ft.): 5.36				Wheel Diameter (in): 24.5				Tip Speed: 6.41 x RPM				Max Motor Frame Size: 215T			

Performance certified is for installation type A: Free inlet, Free outlet. Power rating (Bhp) does not include transmission losses. Performance ratings do not include the effects of appurtenances. The sound ratings shown are loudness values in fan sones at 5 ft. (1.5 m) in a hemispherical free field calculated per AMCA Standard 301. Values shown are for installation type A: Free inlet hemispherical sone levels. FEI calculation is based on default motor calculation in accordance with ANS/AMCA Standard 208.

PRU 270-080 DIRECT DRIVE

RPM	Tip Speed	Max Sones	0.00"SP		0.25"SP		0.38"SP		0.62"SP		0.88"SP		1.12"SP		1.25"SP		1.50"SP		1.75"SP		1.88"SP		2.12"SP	
			CFM		CFM		CFM		CFM		CFM		CFM		CFM		CFM		CFM		CFM		CFM	
			BHP	FEI	BHP	FEI	BHP	FEI	BHP	FEI	BHP	FEI	BHP	FEI	BHP	FEI	BHP	FEI	BHP	FEI	BHP	FEI	BHP	FEI
400	2827	7.0	4533		3294																			
			0.22	2.26	0.26	2.34																		
1158	8185	40	12709		12426		12214		11930		11576		11223		11010		10656		10232		10019		9453	
			5.08	0.31	5.21	0.44	5.3	0.52	5.42	0.63	5.55	0.75	5.67	0.85	5.73	0.9	5.82	0.98	5.91	1.05	5.94	1.07	5.99	1.13
Maximum RPM 1158					Max HP: 10.00				Outlet Area (Sq.Ft.): 6.55				Wheel Diameter (in): 27				Tip Speed: 7.07 x RPM				Max Motor Frame Size: 215T			

Performance certified is for installation type A: Free inlet, Free outlet. Power rating (Bhp) does not include transmission losses. Performance ratings do not include the effects of appurtenances. The sound ratings shown are loudness values in fan sones at 5 ft. (1.5 m) in a hemispherical free field calculated per AMCA Standard 301. Values shown are for installation type A: Free inlet hemispherical sone levels. FEI calculation is based on default motor calculation in accordance with ANS/AMCA Standard 208.

PRU 270-050 DIRECT DRIVE

RPM	Tip Speed	Max Sones	0.00"SP		0.25"SP		0.62"SP		0.88"SP		1.25"SP		1.50"SP		1.75"SP		2.12"SP		2.38"SP		2.75"SP		3.00"SP	
			CFM		CFM		CFM		CFM		CFM		CFM		CFM		CFM		CFM		CFM		CFM	
			BHP	FEI	BHP	FEI	BHP	FEI	BHP	FEI	BHP	FEI	BHP	FEI	BHP	FEI	BHP	FEI	BHP	FEI	BHP	FEI	BHP	FEI
400	2827	6.3	3021		2007																			
			0.14	2.39	0.17	2.24																		
1268	8963	33	9543		9264		8875		8540		8151		7816		7482		6981		6591		5867		5311	
			4.1	0.3	4.25	0.43	4.45	0.58	4.6	0.69	4.75	0.8	4.86	0.88	4.95	0.94	5.04	1	5.07	1.03	5.04	1.06	4.94	1.06
Maximum RPM 1268					Max HP: 10.00				Outlet Area (Sq.Ft.): 6.55				Wheel Diameter (in): 27				Tip Speed: 7.07 x RPM				Max Motor Frame Size: 215T			

Performance certified is for installation type A: Free inlet, Free outlet. Power rating (Bhp) does not include transmission losses. Performance ratings do not include the effects of appurtenances. The sound ratings shown are loudness values in fan sones at 5 ft. (1.5 m) in a hemispherical free field calculated per AMCA Standard 301. Values shown are for installation type A: Free inlet hemispherical sone levels. FEI calculation is based on default motor calculation in accordance with ANS/AMCA Standard 208.

PRU 270-030 DIRECT DRIVE

RPM	Tip Speed	Max Sones	0.00"SP		0.50"SP		1.00"SP		1.50"SP		2.00"SP		2.62"SP		3.12"SP		3.62"SP		4.12"SP		4.62"SP		5.12"SP	
			CFM		CFM		CFM		CFM		CFM		CFM		CFM		CFM		CFM		CFM		CFM	
			BHP	FEI	BHP	FEI	BHP	FEI	BHP	FEI	BHP	FEI	BHP	FEI	BHP	FEI	BHP	FEI	BHP	FEI	BHP	FEI	BHP	FEI
400	2827	5.7	2026																					
			0.08	2.57																				
1544	10914	54	7727		7418		7109		6748		6388		5873		5461		4997		4482		3864		2937	
			4.53	0.22	4.77	0.43	4.98	0.58	5.18	0.72	5.35	0.82	5.55	0.93	5.68	0.98	5.78	1.01	5.84	1.02	5.8	0.99	5.46	0.9
Maximum RPM 1544					Max HP: 10.00				Outlet Area (Sq.Ft.): 6.55				Wheel Diameter (in): 27				Tip Speed: 7.07 x RPM				Max Motor Frame Size: 215T			

Performance certified is for installation type A: Free inlet, Free outlet. Power rating (Bhp) does not include transmission losses. Performance ratings do not include the effects of appurtenances. The sound ratings shown are loudness values in fan sones at 5 ft. (1.5 m) in a hemispherical free field calculated per AMCA Standard 301. Values shown are for installation type A: Free inlet hemispherical sone levels. FEI calculation is based on default motor calculation in accordance with ANS/AMCA Standard 208.

PRU 300-100 DIRECT DRIVE

RPM	Tip Speed	Max Sones	0.00"SP		0.12"SP		0.25"SP		0.50"SP		0.62"SP		0.75"SP		0.88"SP		1.00"SP		1.25"SP		1.38"SP		1.50"SP	
			CFM		CFM		CFM		CFM		CFM		CFM		CFM		CFM		CFM		CFM		CFM	
			BHP	FEI	BHP	FEI	BHP	FEI	BHP	FEI	BHP	FEI	BHP	FEI	BHP	FEI	BHP	FEI	BHP	FEI	BHP	FEI	BHP	FEI
400	2566	8.6	3428		2940		2147																	
			0.16	2.34	0.17	2.5	0.16	2.48																
1030	6607	41	8998		8847		8647		8245		8045		7844		7593		7392		6840		6539		6188	
			2.56	0.44	2.59	0.52	2.63	0.62	2.71	0.79	2.75	0.87	2.78	0.93	2.82	1	2.84	1.04	2.88	1.13	2.89	1.16	2.88	1.18
Maximum RPM 1030					Max HP: 10.00				Outlet Area (Sq.Ft.): 5.36				Wheel Diameter (in): 24.5				Tip Speed: 6.41 x RPM				Max Motor Frame Size: 215T			

Performance certified is for installation type A: Free inlet, Free outlet. Power rating (Bhp) does not include transmission losses. Performance ratings do not include the effects of appurtenances. The sound ratings shown are loudness values in fan sones at 5 ft. (1.5 m) in a hemispherical free field calculated per AMCA Standard 301. Values shown are for installation type A: Free inlet hemispherical sone levels. FEI calculation is based on default motor calculation in accordance with ANS/AMCA Standard 208.

PRU 300-080 DIRECT DRIVE

RPM	Tip Speed	Max Sones	0.00"SP		0.25"SP		0.38"SP		0.62"SP		0.88"SP		1.12"SP		1.25"SP		1.50"SP		1.75"SP		1.88"SP		2.12"SP	
			CFM		CFM		CFM		CFM		CFM		CFM		CFM		CFM		CFM		CFM		CFM	
			BHP	FEI	BHP	FEI	BHP	FEI	BHP	FEI	BHP	FEI	BHP	FEI	BHP	FEI	BHP	FEI	BHP	FEI	BHP	FEI	BHP	FEI
400	3142	8.5	6198		4915		3930																	
			0.37	1.88	0.43	2.08	0.43	2.05																
1082	8498	44	16289		15926		15745		15382		14928		14566		14293		13840		13386		13114		12570	
			7.02	0.28	7.2	0.41	7.28	0.47	7.44	0.58	7.63	0.7	7.77	0.79	7.86	0.84	7.99	0.92	8.11	0.99	8.16	1.02	8.24	1.08
Maximum RPM 1082					Max HP: 10.00				Outlet Area (Sq.Ft.): 8.03				Wheel Diameter (in): 30				Tip Speed: 7.85 x RPM				Max Motor Frame Size: 215T			

Performance certified is for installation type A: Free inlet, Free outlet. Power rating (Bhp) does not include transmission losses. Performance ratings do not include the effects of appurtenances. The sound ratings shown are loudness values in fan sones at 5 ft. (1.5 m) in a hemispherical free field calculated per AMCA Standard 301. Values shown are for installation type A: Free inlet hemispherical sone levels. FEI calculation is based on default motor calculation in accordance with ANS/AMCA Standard 208.

PRU 300-050 DIRECT DRIVE

RPM	Tip Speed	Max Sones	0.00"SP		0.38"SP		0.62"SP		1.00"SP		1.25"SP		1.62"SP		2.00"SP		2.25"SP		2.62"SP		2.88"SP		3.25"SP	
			CFM		CFM		CFM		CFM		CFM		CFM		CFM		CFM		CFM		CFM		CFM	
			BHP	FEI	BHP	FEI	BHP	FEI	BHP	FEI	BHP	FEI	BHP	FEI	BHP	FEI	BHP	FEI	BHP	FEI	BHP	FEI	BHP	FEI
400	3142	7.7	4141		2272																			
			0.23	2.05	0.27	1.93																		
1185	9307	45	12233		11734		11448		10877		10520		10020		9449		9021		8307		7736		6736	
			5.66	0.27	5.95	0.45	6.11	0.54	6.39	0.69	6.54	0.76	6.72	0.85	6.87	0.93	6.95	0.97	7.01	1.02	6.99	1.04	6.81	1.04
Maximum RPM 1185					Max HP: 10.00				Outlet Area (Sq.Ft.): 8.03				Wheel Diameter (in): 30				Tip Speed: 7.85 x RPM				Max Motor Frame Size: 215T			

Performance certified is for installation type A: Free inlet, Free outlet. Power rating (Bhp) does not include transmission losses. Performance ratings do not include the effects of appurtenances. The sound ratings shown are loudness values in fan sones at 5 ft. (1.5 m) in a hemispherical free field calculated per AMCA Standard 301. Values shown are for installation type A: Free inlet hemispherical sone levels. FEI calculation is based on default motor calculation in accordance with ANS/AMCA Standard 208.

PRU 300-030 DIRECT DRIVE

RPM	Tip Speed	Max Sones	0.00"SP		0.50"SP		1.00"SP		1.50"SP		2.00"SP		2.62"SP		3.12"SP		3.62"SP		4.12"SP		4.62"SP		5.12"SP	
			CFM		CFM		CFM		CFM		CFM		CFM		CFM		CFM		CFM		CFM		CFM	
			BHP	FEI	BHP	FEI	BHP	FEI	BHP	FEI	BHP	FEI	BHP	FEI	BHP	FEI	BHP	FEI	BHP	FEI	BHP	FEI	BHP	FEI
400	3142	6.9	2795																					
			0.13	2.32																				
1442	11325	59	9899		9569		9173		8778		8316		7722		7260		6732		6138		5478		4686	
			6.24	0.2	6.53	0.37	6.82	0.53	7.07	0.66	7.32	0.77	7.58	0.88	7.75	0.94	7.9	0.98	8.02	1	8.05	0.99	7.93	0.95
Maximum RPM 1442					Max HP: 10.00				Outlet Area (Sq.Ft.): 8.03				Wheel Diameter (in): 30				Tip Speed: 7.85 x RPM				Max Motor Frame Size: 215T			

Performance certified is for installation type A: Free inlet, Free outlet. Power rating (Bhp) does not include transmission losses. Performance ratings do not include the effects of appurtenances. The sound ratings shown are loudness values in fan sones at 5 ft. (1.5 m) in a hemispherical free field calculated per AMCA Standard 301. Values shown are for installation type A: Free inlet hemispherical sone levels. FEI calculation is based on default motor calculation in accordance with ANS/AMCA Standard 208.

PRD 060-100 DIRECT DRIVE

RPM	Tip Speed	Max Sones	0.00"SP		0.12"SP		0.25"SP		0.38"SP		0.50"SP		0.75"SP		0,88"SP		1.00"SP		1.12"SP		1.25"SP		1.38"SP	
			CFM		CFM		CFM		CFM		CFM		CFM		CFM		CFM		CFM		CFM		CFM	
			BHP	FEI	BHP	FEI	BHP	FEI	BHP	FEI	BHP	FEI	BHP	FEI	BHP	FEI	BHP	FEI	BHP	FEI	BHP	FEI	BHP	FEI
350	916	< 0.3	42																					
			0.01	0.76																				
1725	4516	10.6	271		249		227		205		179		111		61									
			0.09	0.83	0.09	0.95	0.09	1.05	0.09	1.15	0.09	1.23	0.09	1.34	0.07	1.43								
1800	4712	11.4	283		262		242		219		196		137		95									
			0.10	0.77	0.11	0.88	0.10	0.98	0.10	1.08	0.10	1.15	0.10	1.27	0.09	1.33								
2152	5634	16.3	338		322		305		286		267		229		204		180		150		114		70	
			0.18	0.55	0.18	0.63	0.18	0.70	0.18	0.79	0.18	0.86	0.18	0.97	0.18	1.02	0.18	1.05	0.17	1.09	0.16	1.13	0.14	1.19
Maximum RPM 2152					Max HP: 0.33				Outlet Area (Sq.Ft.): 1.32				Wheel Diameter (in): 10				Tip Speed: 2.62 x RPM				Max Motor Frame Size: 56			

Performance certified is for installation type A: Free inlet, Free outlet. Power rating (Bhp) does not include transmission losses. Performance ratings do not include the effects of appurtenances. The sound ratings shown are loudness values in fan sones at 5 ft. (1.5 m) in a hemispherical free field calculated per AMCA Standard 301. Values shown are for installation type A: Free inlet hemispherical sone levels. FEI calculation is based on default motor calculation in accordance with ANS/AMCA Standard 208.

PRD 070-100 DIRECT DRIVE

RPM	Tip Speed	Max Sones	0.00"SP		0.12"SP		0.25"SP		0.38"SP		0.50"SP		0.75"SP		0.88"SP		1.00"SP		1.12"SP		1.25"SP		1.38"SP	
			CFM		CFM		CFM		CFM		CFM		CFM		CFM		CFM		CFM		CFM		CFM	
			BHP	FEI	BHP	FEI	BHP	FEI	BHP	FEI	BHP	FEI	BHP	FEI	BHP	FEI	BHP	FEI	BHP	FEI	BHP	FEI	BHP	FEI
350	916	< 0.3	63																					
			0.01	0.77																				
1725	4516	12.5	524		490		448		406		359		236		126									
			0.10	1.01	0.10	1.14	0.10	1.27	0.10	1.38	0.10	1.45	0.10	1.52	0.08	1.54								
1800	4712	13.6	547		512		476		436		392		282		207									
			0.11	0.94	0.12	1.07	0.12	1.19	0.12	1.29	0.12	1.38	0.12	1.46	0.11	1.47								
2152	5634	19.2	654		627		596		564		532		458		416		369		316		247		141	
			0.19	0.68	0.20	0.78	0.20	0.89	0.20	0.98	0.20	1.06	0.20	1.19	0.20	1.23	0.20	1.26	0.20	1.27	0.19	1.28	0.15	1.30
Maximum RPM 2152					Max HP: 0.33				Outlet Area (Sq.Ft.): 1.32				Wheel Diameter (in): 10				Tip Speed: 2.62 x RPM				Max Motor Frame Size: 56			

Performance certified is for installation type A: Free inlet, Free outlet. Power rating (Bhp) does not include transmission losses. Performance ratings do not include the effects of appurtenances. The sound ratings shown are loudness values in fan sones at 5 ft. (1.5 m) in a hemispherical free field calculated per AMCA Standard 301. Values shown are for installation type A: Free inlet hemispherical sone levels. FEI calculation is based on default motor calculation in accordance with ANS/AMCA Standard 208.

PRD 080-100 DIRECT DRIVE

RPM	Tip Speed	Max Sones	0.00"SP		0.12"SP		0.25"SP		0.38"SP		0.50"SP		0.75"SP		0.88"SP		1.00"SP		1.12"SP		1.25"SP		1.38"SP	
			CFM		CFM		CFM		CFM		CFM		CFM		CFM		CFM		CFM		CFM		CFM	
			BHP	FEI	BHP	FEI	BHP	FEI	BHP	FEI	BHP	FEI	BHP	FEI	BHP	FEI	BHP	FEI	BHP	FEI	BHP	FEI	BHP	FEI
350	916	< 0.3	123																					
			0.01	0.83																				
1725	4516	14.0	665		628		585		536		483		332		171									
			0.11	1.03	0.12	1.16	0.12	1.29	0.12	1.40	0.12	1.47	0.12	1.55	0.09	1.55								
1800	4712	15.0	694		655		616		571		526		397		290									
			0.13	0.95	0.13	1.10	0.14	1.21	0.14	1.32	0.14	1.39	0.14	1.49	0.13	1.51								
2152	5634	21	830		803		770		729		696		615		569		508		441		347		193	
			0.22	0.69	0.22	0.79	0.23	0.90	0.23	1.00	0.24	1.08	0.24	1.21	0.24	1.25	0.24	1.29	0.23	1.31	0.22	1.32	0.17	1.31
Maximum RPM 2152					Max HP: 0.33				Outlet Area (Sq.Ft.): 1.32				Wheel Diameter (in): 10				Tip Speed: 2.62 x RPM				Max Motor Frame Size: 56			

Performance certified is for installation type A: Free inlet, Free outlet. Power rating (Bhp) does not include transmission losses. Performance ratings do not include the effects of appurtenances. The sound ratings shown are loudness values in fan sones at 5 ft. (1.5 m) in a hemispherical free field calculated per AMCA Standard 301. Values shown are for installation type A: Free inlet hemispherical sone levels. FEI calculation is based on default motor calculation in accordance with ANS/AMCA Standard 208.

PRD 100-100 DIRECT DRIVE

RPM	Tip Speed	Max Sones	0.00"SP		0.12"SP		0.25"SP		0.38"SP		0.50"SP		0.62"SP		0.62"SP		0.75"SP		0.88"SP		1.00"SP		1.12"SP	
			CFM		CFM		CFM		CFM		CFM		CFM		CFM		CFM		CFM		CFM		CFM	
			BHP	FEI	BHP	FEI	BHP	FEI	BHP	FEI	BHP	FEI	BHP	FEI	BHP	FEI	BHP	FEI	BHP	FEI	BHP	FEI	BHP	FEI
350	916	< 0.3	154																					
			0.01	0.86																				
1725	4516	15	972		910		854		792		724		644		644		539							
			0.13	1.12	0.14	1.28	0.14	1.40	0.15	1.51	0.15	1.59	0.15	1.65	0.15	1.65	0.15	1.67						
1800	4712	16	1014		956		898		840		782		711		711		627		485					
			0.15	1.05	0.16	1.19	0.16	1.32	0.17	1.43	0.17	1.51	0.17	1.57	0.17	1.57	0.17	1.61	0.16	1.61				
2032	5320	19	1145		1094		1043		992		941		890		890		824		759		671		533	
			0.22	0.84	0.22	0.97	0.23	1.09	0.24	1.20	0.24	1.29	0.24	1.35	0.24	1.35	0.25	1.42	0.25	1.46	0.24	1.49	0.23	1.48
Maximum RPM 2032					Max HP: 0.33				Outlet Area (Sq.Ft.): 1.32				Wheel Diameter (in): 10				Tip Speed: 2.62 x RPM				Max Motor Frame Size: 56			

Performance certified is for installation type A: Free inlet, Free outlet. Power rating (Bhp) does not include transmission losses. Performance ratings do not include the effects of appurtenances. The sound ratings shown are loudness values in fan sones at 5 ft. (1.5 m) in a hemispherical free field calculated per AMCA Standard 301. Values shown are for installation type A: Free inlet hemispherical sone levels. FEI calculation is based on default motor calculation in accordance with ANS/AMCA Standard 208.

PRD 122-100 DIRECT DRIVE

RPM	Tip Speed	Max Sones	0.00"SP		0.12"SP		0.25"SP		0.38"SP		0.50"SP		0.75"SP		0.88"SP		1.00"SP		1.12"SP		1.25"SP		1.38"SP	
			CFM		CFM		CFM		CFM		CFM		CFM		CFM		CFM		CFM		CFM		CFM	
			BHP	FEI	BHP	FEI	BHP	FEI	BHP	FEI	BHP	FEI	BHP	FEI	BHP	FEI	BHP	FEI	BHP	FEI	BHP	FEI	BHP	FEI
350	1122	0.4	302																					
			0.01	1.02																				
900	2886	6.8	907		763		596																	
			0.04	2.09	0.05	2.24	0.05	2.22																
1200	3848	12.0	1233		1120		1019		902		744													
			0.12	1.41	0.12	1.63	0.13	1.71	0.13	1.77	0.13	1.78												
1725	5532	22	1786		1718		1639		1570		1491		1332		1241		1127		991		741			
			0.37	0.73	0.37	0.84	0.39	0.96	0.39	1.05	0.40	1.14	0.42	1.26	0.42	1.30	0.42	1.33	0.41	1.33	0.37	1.29		
1800	5773	23	1864		1793		1722		1651		1579		1437		1354		1259		1152		998		725	
			0.42	0.67	0.43	0.79	0.44	0.89	0.45	0.99	0.46	1.07	0.47	1.19	0.47	1.24	0.48	1.27	0.47	1.29	0.46	1.30	0.41	1.24
1845	5917	24	1911		1838		1777		1704		1631		1497		1412		1327		1230		1108		926	
			0.45	0.64	0.46	0.76	0.47	0.85	0.48	0.95	0.49	1.03	0.50	1.15	0.51	1.20	0.51	1.24	0.51	1.27	0.50	1.28	0.48	1.26
Maximum RPM 1845					Max HP: 0.50				Outlet Area (Sq.Ft.): 1.99				Wheel Diameter (in): 12.25				Tip Speed: 3.21 x RPM				Max Motor Frame Size: 56			

Performance certified is for installation type A: Free inlet, Free outlet. Power rating (Bhp) does not include transmission losses. Performance ratings do not include the effects of appurtenances. The sound ratings shown are loudness values in fan sones at 5 ft. (1.5 m) in a hemispherical free field calculated per AMCA Standard 301. Values shown are for installation type A: Free inlet hemispherical sone levels. FEI calculation is based on default motor calculation in accordance with ANS/AMCA Standard 208.

PRD 135-100 DIRECT DRIVE

RPM	Tip Speed	Max Sones	0.00"SP		0.12"SP		0.38"SP		0.50"SP		0.75"SP		0.88"SP		1.00"SP		1.25"SP		1.38"SP		1.62"SP		1.75"SP	
			CFM		CFM		CFM		CFM		CFM		CFM		CFM		CFM		CFM		CFM		CFM	
			BHP	FEI	BHP	FEI	BHP	FEI	BHP	FEI	BHP	FEI	BHP	FEI	BHP	FEI	BHP	FEI	BHP	FEI	BHP	FEI	BHP	FEI
350	1237	0.8	473																					
			0.01	0.59																				
600	2121	4.1	850		616																			
			0.02	2.23	0.03	2.23																		
900	3181	8.2	1302		1154		743																	
			0.08	1.66	0.08	1.83	0.09	1.84																
1200	4241	14.1	1754		1653		1429		1295		824													
			0.2	1.06	0.21	1.21	0.22	1.41	0.22	1.48	0.2	1.46												
1725	6097	25	2549		2500		2353		2288		2125		2028		1946		1702		1555		953			
			0.57	0.57	0.59	0.66	0.62	0.87	0.63	0.94	0.65	1.08	0.66	1.14	0.66	1.18	0.66	1.24	0.65	1.25	0.54	1.15		
1800	6362	26	2659		2608		2473		2405		2252		2184		2082		1895		1759		1419		1096	
			0.65	0.53	0.67	0.62	0.7	0.81	0.71	0.89	0.73	1.03	0.74	1.07	0.75	1.13	0.75	1.19	0.75	1.22	0.72	1.21	0.65	1.15
1845	6521	27	2726		2674		2552		2482		2343		2256		2186		1994		1873		1594		1385	
			0.7	0.5	0.72	0.59	0.75	0.77	0.76	0.85	0.78	0.98	0.8	1.05	0.8	1.09	0.81	1.17	0.81	1.19	0.79	1.21	0.76	1.19
Maximum RPM 1845					Max HP: 1.00				Outlet Area (Sq.Ft.): 1.99				Wheel Diameter (in): 13.5				Tip Speed: 3.53 x RPM				Max Motor Frame Size: 145T			

Performance certified is for installation type A: Free inlet, Free outlet. Power rating (Bhp) does not include transmission losses. Performance ratings do not include the effects of appurtenances. The sound ratings shown are loudness values in fan sones at 5 ft. (1.5 m) in a hemispherical free field calculated per AMCA Standard 301. Values shown are for installation type A: Free inlet hemispherical sone levels. FEI calculation is based on default motor calculation in accordance with ANS/AMCA Standard 208.

PRD 135-080 DIRECT DRIVE

RPM	Tip Speed	Max Sones	0.00"SP		0.25"SP		0.38"SP		0.62"SP		0.75"SP		1.00"SP		1.12"SP		1.38"SP		1.50"SP		1.75"SP		1.88"SP	
			CFM		CFM		CFM		CFM		CFM		CFM		CFM		CFM		CFM		CFM		CFM	
			BHP	FEI	BHP	FEI	BHP	FEI	BHP	FEI	BHP	FEI	BHP	FEI	BHP	FEI	BHP	FEI	BHP	FEI	BHP	FEI	BHP	FEI
350	1237	0.8	442																					
			0.01	1.16																				
900	3181	7.9	1158		881		669																	
			0.06	2.02	0.08	2.26	0.07	2.21																
1200	4241	13.7	1557		1358		1249		971		625													
			0.16	1.31	0.17	1.63	0.18	1.73	0.18	1.84	0.15	1.76												
1725	6097	24	2295		2136		2064		1919		1847		1672		1570		1307		1073					
			0.53	0.63	0.51	0.92	0.53	1	0.56	1.15	0.57	1.21	0.58	1.32	0.58	1.35	0.57	1.38	0.53	1.35				
1800	6362	26	2401		2247		2186		2034		1974		1806		1714		1501		1348					
			0.61	0.57	0.57	0.86	0.6	0.93	0.63	1.08	0.64	1.14	0.66	1.25	0.66	1.29	0.66	1.34	0.64	1.34				
1937	6846	27	2591		2458		2409		2277		2211		2079		1996		1831		1732		1501		1319	
			0.77	0.49	0.79	0.69	0.8	0.76	0.82	0.92	0.83	0.98	0.84	1.1	0.85	1.15	0.86	1.23	0.85	1.25	0.83	1.28	0.8	1.26
Maximum RPM 1937					Max HP: 1.00				Outlet Area (Sq.Ft.): 1.99				Wheel Diameter (in): 13.5				Tip Speed: 3.53 x RPM				Max Motor Frame Size: 145T			

Performance certified is for installation type A: Free inlet, Free outlet. Power rating (Bhp) does not include transmission losses. Performance ratings do not include the effects of appurtenances. The sound ratings shown are loudness values in fan sones at 5 ft. (1.5 m) in a hemispherical free field calculated per AMCA Standard 301. Values shown are for installation type A: Free inlet hemispherical sone levels. FEI calculation is based on default motor calculation in accordance with ANS/AMCA Standard 208.

PRD 150-100 DIRECT DRIVE

RPM	Tip Speed	Max Sones	0.00"SP		0.12"SP		0.38"SP		0.50"SP		0.62"SP		0.88"SP		1.00"SP		1.12"SP		1.25"SP		1.50"SP		1.62"SP	
			CFM		CFM		CFM		CFM		CFM		CFM		CFM		CFM		CFM		CFM		CFM	
			BHP	FEI	BHP	FEI	BHP	FEI	BHP	FEI	BHP	FEI	BHP	FEI	BHP	FEI	BHP	FEI	BHP	FEI	BHP	FEI	BHP	FEI
350	1374	1.3	657																					
			0.01	1.39																				
600	2356	5.2	1174		920																			
			0.04	2.56	0.05	2.57																		
900	3534	10.0	1794		1634		1248		871															
			0.14	1.62	0.14	1.86	0.15	1.96	0.14	1.87														
1200	4712	17.1	2415		2314		2063		1924		1772		1286											
			0.33	0.99	0.33	1.18	0.36	1.41	0.37	1.49	0.37	1.54	0.36	1.54										
1845	7245	34	3739		3692		3548		3477		3405		3238		3166		3070		2975		2760		2640	
			1.19	0.44	1.21	0.51	1.25	0.69	1.27	0.76	1.29	0.83	1.33	0.96	1.34	1.01	1.35	1.06	1.36	1.11	1.37	1.18	1.37	1.2
Maximum RPM 1845					Max HP: 1.50				Outlet Area (Sq.Ft.): 2.46				Wheel Diameter (in): 15				Tip Speed: 3.93 x RPM				Max Motor Frame Size: 145T			

Performance certified is for installation type A: Free inlet, Free outlet. Power rating (Bhp) does not include transmission losses. Performance ratings do not include the effects of appurtenances. The sound ratings shown are loudness values in fan sones at 5 ft. (1.5 m) in a hemispherical free field calculated per AMCA Standard 301. Values shown are for installation type A: Free inlet hemispherical sone levels. FEI calculation is based on default motor calculation in accordance with ANS/AMCA Standard 208.

PRD 150-080 DIRECT DRIVE

RPM	Tip Speed	Max Sones	0.00"SP		0.25"SP		0.50"SP		0.62"SP		0.88"SP		1.12"SP		1.38"SP		1.62"SP		1.75"SP		2.00"SP		2.25"SP	
			CFM		CFM		CFM		CFM		CFM		CFM		CFM		CFM		CFM		CFM		CFM	
			BHP	FEI	BHP	FEI	BHP	FEI	BHP	FEI	BHP	FEI	BHP	FEI	BHP	FEI	BHP	FEI	BHP	FEI	BHP	FEI	BHP	FEI
350	1374	1.2	608																					
			0.01	0.88																				
600	2356	5.0	1050																					
			0.03	2.5																				
900	3534	9.6	1594		1292		787																	
			0.11	1.74	0.13	2.04	0.12	2																
1200	4712	16.6	2149		1927		1703		1569		1144													
			0.28	1.04	0.31	1.32	0.32	1.51	0.33	1.58	0.31	1.6												
1937	7607	33	3554		3418		3282		3191		3055		2919		2738		2580		2466		2240		1923	
			1.3	0.39	1.33	0.54	1.36	0.68	1.38	0.76	1.4	0.87	1.42	0.96	1.44	1.05	1.45	1.11	1.45	1.14	1.44	1.17	1.39	1.17
Maximum RPM 1937					Max HP: 1.50				Outlet Area (Sq.Ft.): 2.46				Wheel Diameter (in): 15				Tip Speed: 3.93 x RPM				Max Motor Frame Size: 145T			

Performance certified is for installation type A: Free inlet, Free outlet. Power rating (Bhp) does not include transmission losses. Performance ratings do not include the effects of appurtenances. The sound ratings shown are loudness values in fan sones at 5 ft. (1.5 m) in a hemispherical free field calculated per AMCA Standard 301. Values shown are for installation type A: Free inlet hemispherical sone levels. FEI calculation is based on default motor calculation in accordance with ANS/AMCA Standard 208.

PRD 150-050 DIRECT DRIVE

RPM	Tip Speed	Max Sones	0.00"SP		0.25"SP		0.50"SP		0.75"SP		1.00"SP		1.25"SP		1.38"SP		1.62"SP		1.88"SP		2.12"SP		2.38"SP	
			CFM		CFM		CFM		CFM		CFM		CFM		CFM		CFM		CFM		CFM		CFM	
			BHP	FEI	BHP	FEI	BHP	FEI	BHP	FEI	BHP	FEI	BHP	FEI	BHP	FEI	BHP	FEI	BHP	FEI	BHP	FEI	BHP	FEI
350	1374	1.0	370																					
			0.03	1.49																				
900	3534	8.7	1107		842		424																	
			0.11	1.40	0.11	1.67	0.11	1.48																
1200	4712	15.1	1492		1289		1099		848															
			0.17	1.20	0.18	1.53	0.19	1.75	0.19	1.78														
1725	6774	26	2189		2051		1914		1776		1639		1484		1381		1175		866					
			0.37	0.84	0.38	1.15	0.40	1.39	0.41	1.57	0.43	1.68	0.44	1.75	0.45	1.78	0.44	1.77	0.42	1.68				
1800	7069	28	2284		2158		2033		1889		1764		1620		1531		1351		1118		778			
			0.42	0.78	0.43	1.05	0.45	1.28	0.47	1.48	0.48	1.60	0.50	1.69	0.50	1.72	0.51	1.75	0.50	1.72	0.46	1.58		
2122	8333	36	2692		2587		2481		2354		2249		2143		2079		1953		1826		1678		1509	
			0.68	0.56	0.70	0.78	0.71	0.97	0.74	1.17	0.76	1.30	0.78	1.40	0.79	1.45	0.81	1.53	0.82	1.58	0.83	1.61	0.83	1.62
Maximum RPM 2122					Max HP: 1.50				Outlet Area (Sq.Ft.): 2.46				Wheel Diameter (in): 15				Tip Speed: 3.93 x RPM				Max Motor Frame Size: 145T			

Performance certified is for installation type A: Free inlet, Free outlet. Power rating (Bhp) does not include transmission losses. Performance ratings do not include the effects of appurtenances. The sound ratings shown are loudness values in fan sones at 5 ft. (1.5 m) in a hemispherical free field calculated per AMCA Standard 301. Values shown are for installation type A: Free inlet hemispherical sone levels. FEI calculation is based on default motor calculation in accordance with ANS/AMCA Standard 208.

PRD 165-100 DIRECT DRIVE

RPM	Tip Speed	Max Sones	0.00"SP		0.12"SP		0.38"SP		0.50"SP		0.62"SP		0.88"SP		1.00"SP		1.12"SP		1.25"SP		1.50"SP		1.62"SP	
			CFM		CFM		CFM		CFM		CFM		CFM		CFM		CFM		CFM		CFM		CFM	
			BHP	FEI	BHP	FEI	BHP	FEI	BHP	FEI	BHP	FEI	BHP	FEI	BHP	FEI	BHP	FEI	BHP	FEI	BHP	FEI	BHP	FEI
350	1512	1.7	882																					
			0.01	0.12																				
600	2592	6.3	1570		1296																			
			0.06	2.48	0.07	2.52																		
900	3888	11.9	2395		2212		1816		1541		1006													
			0.22	1.36	0.22	1.63	0.25	1.76	0.25	1.78	0.22	1.64												
1075	4644	17.4	2878		2739		2440		2275		2076		1442											
			0.38	1	0.38	1.19	0.42	1.41	0.43	1.48	0.43	1.53	0.4	1.5										
1200	5184	20	3223		3106		2856		2711		2547		2158		1893		1402							
			0.53	0.82	0.49	1.04	0.56	1.22	0.58	1.3	0.59	1.37	0.59	1.45	0.58	1.44	0.53	1.36						
1805	7797	39	4869		4807		4651		4589		4496		4309		4216		4123		4029		3843		3718	
			1.79	0.37	1.82	0.44	1.88	0.59	1.9	0.65	1.93	0.72	1.98	0.85	2	0.9	2.02	0.95	2.03	0.99	2.05	1.05	2.06	1.09
Maximum RPM 1805					Max HP: 3.00				Outlet Area (Sq.Ft.): 2.94				Wheel Diameter (in): 16.5				Tip Speed: 4.32 x RPM				Max Motor Frame Size: 145T			

Performance certified is for installation type A: Free inlet, Free outlet. Power rating (Bhp) does not include transmission losses. Performance ratings do not include the effects of appurtenances. The sound ratings shown are loudness values in fan sones at 5 ft. (1.5 m) in a hemispherical free field calculated per AMCA Standard 301. Values shown are for installation type A: Free inlet hemispherical sone levels. FEI calculation is based on default motor calculation in accordance with ANS/AMCA Standard 208.

PRD 165-080 DIRECT DRIVE

RPM	Tip Speed	Max Sones	0.00"SP		0.25"SP		0.50"SP		0.88"SP		1.12"SP		1.38"SP		1.62"SP		1.88"SP		2.25"SP		2.50"SP		2.75"SP	
			CFM		CFM		CFM		CFM		CFM		CFM		CFM		CFM		CFM		CFM		CFM	
			BHP	FEI	BHP	FEI	BHP	FEI	BHP	FEI	BHP	FEI	BHP	FEI	BHP	FEI	BHP	FEI	BHP	FEI	BHP	FEI	BHP	FEI
350	1512	1.6	810																					
			0.01	1.15																				
600	2592	6.1	1400		773																			
			0.05	2.61	0.06	2.45																		
900	3888	11.6	2127		1804		1383																	
			0.18	1.47	0.2	1.78	0.21	1.87																
1200	5184	19.8	2882		2626		2377		1906		1221													
			0.47	0.84	0.49	1.12	0.52	1.3	0.53	1.46	0.46	1.39												
1895	8186	41	4627		4480		4303		4067		3919		3742		3565		3359		3005		2680		2208	
			1.96	0.32	2	0.45	2.04	0.59	2.1	0.76	2.12	0.84	2.15	0.93	2.17	0.99	2.18	1.05	2.17	1.11	2.13	1.12	2.01	1.09
Maximum RPM 1895					Max HP: 3.00				Outlet Area (Sq.Ft.): 2.94				Wheel Diameter (in): 16.5				Tip Speed: 4.32 x RPM				Max Motor Frame Size: 145T			

Performance certified is for installation type A: Free inlet, Free outlet. Power rating (Bhp) does not include transmission losses. Performance ratings do not include the effects of appurtenances. The sound ratings shown are loudness values in fan sones at 5 ft. (1.5 m) in a hemispherical free field calculated per AMCA Standard 301. Values shown are for installation type A: Free inlet hemispherical sone levels. FEI calculation is based on default motor calculation in accordance with ANS/AMCA Standard 208.

PRD 165-050 DIRECT DRIVE

RPM	Tip Speed	Max Sones	0.00"SP		0.25"SP		0.62"SP		0.88"SP		1.12"SP		1.50"SP		1.75"SP		2.00"SP		2.25"SP		2.62"SP		2.88"SP	
			CFM		CFM		CFM		CFM		CFM		CFM		CFM		CFM		CFM		CFM		CFM	
			BHP	FEI	BHP	FEI	BHP	FEI	BHP	FEI	BHP	FEI	BHP	FEI	BHP	FEI	BHP	FEI	BHP	FEI	BHP	FEI	BHP	FEI
350	1512	1.4	506																					
			0.04	1.56																				
600	2592	5.5	969		426																			
			0.09	1.44	0.09	1.33																		
900	3888	10.5	1477		1179		471																	
			0.15	1.32	0.15	1.63	0.16	1.36																
1200	5184	18.0	1999		1769		1449		1156		667													
			0.25	1.10	0.25	1.45	0.27	1.73	0.28	1.76	0.26	1.50												
2076	8968	41	3506		3396		3203		3066		2955		2763		2625		2487		2322		2075		1854	
			1.03	0.48	1.04	0.65	1.08	0.92	1.11	1.08	1.14	1.19	1.18	1.34	1.21	1.41	1.23	1.47	1.25	1.51	1.25	1.54	1.24	1.53
Maximum RPM 2076					Max HP: 3.00				Outlet Area (Sq.Ft.): 2.94				Wheel Diameter (in): 16.5				Tip Speed: 4.32 x RPM				Max Motor Frame Size: 145T			

Performance certified is for installation type A: Free inlet, Free outlet. Power rating (Bhp) does not include transmission losses. Performance ratings do not include the effects of appurtenances. The sound ratings shown are loudness values in fan sones at 5 ft. (1.5 m) in a hemispherical free field calculated per AMCA Standard 301. Values shown are for installation type A: Free inlet hemispherical sone levels. FEI calculation is based on default motor calculation in accordance with ANS/AMCA Standard 208.

PRD 182-100 DIRECT DRIVE

RPM	Tip Speed	Max Sones	0.00"SP		0.25"SP		0.50"SP		0.62"SP		0.88"SP		1.12"SP		1.38"SP		1.62"SP		1.75"SP		2.00"SP		2.25"SP	
			CFM		CFM		CFM		CFM		CFM		CFM		CFM		CFM		CFM		CFM		CFM	
			BHP	FEI	BHP	FEI	BHP	FEI	BHP	FEI	BHP	FEI	BHP	FEI	BHP	FEI	BHP	FEI	BHP	FEI	BHP	FEI	BHP	FEI
350	1672	2.1	1192																					
			0.04	2.5																				
600	2867	6.6	1762																					
			0.09	2.16																				
900	4300	13.1	2689		2259		1305																	
			0.25	1.36	0.25	1.74	0.24	1.63																
1075	5136	17.7	3939		3668		3313		3138		2616													
			0.66	0.78	0.75	0.97	0.76	1.21	0.76	1.28	0.75	1.38												
1565	7477	31	5846		5698		5513		5402		5180		4921		4625		4254		4032		3514		2736	
			2.08	0.37	2.16	0.51	2.24	0.65	2.27	0.72	2.32	0.84	2.35	0.94	2.36	1.03	2.33	1.1	2.31	1.12	2.21	1.14	2	1.12
Maximum RPM 1565					Max HP: 3.00				Outlet Area (Sq.Ft.): 3.59				Wheel Diameter (in): 18.25				Tip Speed: 4.78 x RPM				Max Motor Frame Size: 145T			

Performance certified is for installation type A: Free inlet, Free outlet. Power rating (Bhp) does not include transmission losses. Performance ratings do not include the effects of appurtenances. The sound ratings shown are loudness values in fan sones at 5 ft. (1.5 m) in a hemispherical free field calculated per AMCA Standard 301. Values shown are for installation type A: Free inlet hemispherical sone levels. FEI calculation is based on default motor calculation in accordance with ANS/AMCA Standard 208.

PRD 182-080 DIRECT DRIVE

RPM	Tip Speed	Max Sones	0.00"SP		0.25"SP		0.50"SP		0.88"SP		1.12"SP		1.38"SP		1.62"SP		1.88"SP		2.25"SP		2.50"SP		2.75"SP	
			CFM		CFM		CFM		CFM		CFM		CFM		CFM		CFM		CFM		CFM		CFM	
			BHP	FEI	BHP	FEI	BHP	FEI	BHP	FEI	BHP	FEI	BHP	FEI	BHP	FEI	BHP	FEI	BHP	FEI	BHP	FEI	BHP	FEI
350	1672	2.1	1098																					
			0.03	2.56																				
600	2867	6.4	1943		1351																			
			0.09	2.39	0.1	2.55																		
900	4300	12.8	3002		2642		2247																	
			0.3	1.27	0.33	1.59	0.34	1.81																
1075	5136	17.4	3623		3349		3049		2473		1719													
			0.55	0.86	0.65	1.06	0.66	1.28	0.64	1.5	0.59	1.44												
1643	7850	34	5502		5362		5187		4908		4733		4524		4279		4000		3510		3056		2287	
			2.11	0.35	2.18	0.48	2.26	0.62	2.35	0.8	2.39	0.89	2.43	0.97	2.45	1.05	2.46	1.1	2.42	1.15	2.35	1.14	2.1	1.07
Maximum RPM 1643					Max HP: 3.00				Outlet Area (Sq.Ft.): 3.59				Wheel Diameter (in): 18.25				Tip Speed: 4.78 x RPM				Max Motor Frame Size: 184T			

Performance certified is for installation type A: Free inlet, Free outlet. Power rating (Bhp) does not include transmission losses. Performance ratings do not include the effects of appurtenances. The sound ratings shown are loudness values in fan sones at 5 ft. (1.5 m) in a hemispherical free field calculated per AMCA Standard 301. Values shown are for installation type A: Free inlet hemispherical sone levels. FEI calculation is based on default motor calculation in accordance with ANS/AMCA Standard 208.

PRD 182-050 DIRECT DRIVE

RPM	Tip Speed	Max Sones	0.00"SP		0.38"SP		0.62"SP		1.00"SP		1.25"SP		1.62"SP		1.88"SP		2.25"SP		2.50"SP		2.88"SP		3.12"SP	
			CFM		CFM		CFM		CFM		CFM		CFM		CFM		CFM		CFM		CFM		CFM	
			BHP	FEI	BHP	FEI	BHP	FEI	BHP	FEI	BHP	FEI	BHP	FEI	BHP	FEI	BHP	FEI	BHP	FEI	BHP	FEI	BHP	FEI
350	1672	1.7	741																					
			0.04	1.98																				
600	2867	5.7	1294																					
			0.08	1.84																				
900	4300	11.4	1946		1555		1243																	
			0.22	1.19	0.25	1.55	0.24	1.74																
1075	5136	15.5	2325		2004		1784		1313															
			0.35	0.92	0.41	1.23	0.41	1.43	0.38	1.59														
1200	5733	18.2	2595		2315		2134		1804		1492													
			0.46	0.78	0.55	1.05	0.57	1.22	0.57	1.41	0.55	1.46												
1800	8600	35	3948		3748		3623		3448		3299		3099		2949		2724		2525		2150		1751	
			1.65	0.34	1.78	0.53	1.84	0.64	1.9	0.77	1.94	0.87	1.97	0.98	1.99	1.04	1.99	1.11	1.98	1.14	1.91	1.15	1.78	1.12
Maximum RPM 1800					Max HP: 3.00				Outlet Area (Sq.Ft.): 3.59				Wheel Diameter (in): 18.25				Tip Speed: 4.78 x RPM				Max Motor Frame Size: 184T			

Performance certified is for installation type A: Free inlet, Free outlet. Power rating (Bhp) does not include transmission losses. Performance ratings do not include the effects of appurtenances. The sound ratings shown are loudness values in fan sones at 5 ft. (1.5 m) in a hemispherical free field calculated per AMCA Standard 301. Values shown are for installation type A: Free inlet hemispherical sone levels. FEI calculation is based on default motor calculation in accordance with ANS/AMCA Standard 208.

PRD 200-100 DIRECT DRIVE

RPM	Tip Speed	Max Sones	0.00"SP		0.12"SP		0.38"SP		0.50"SP		0.75"SP		0.88"SP		1.00"SP		1.25"SP		1.38"SP		1.62"SP		1.75"SP	
			CFM		CFM		CFM		CFM		CFM		CFM		CFM		CFM		CFM		CFM		CFM	
			BHP	FEI	BHP	FEI	BHP	FEI	BHP	FEI	BHP	FEI	BHP	FEI	BHP	FEI	BHP	FEI	BHP	FEI	BHP	FEI	BHP	FEI
350	1833	2.8	1496		685																			
			0.05	2.62	0.05	2.03																		
600	3142	7.8	2261		1899																			
			0.13	2.04	0.12	2.3																		
1325	6938	29	6479		6364		6106		5939		5651		5489		5328		4927		4686		4082		3675	
			1.97	0.43	1.64	0.6	1.96	0.71	2.04	0.79	2.12	0.91	2.15	0.96	2.16	1.01	2.17	1.1	2.16	1.13	2.1	1.17	2.03	1.17
Maximum RPM 1325					Max HP: 5.00				Outlet Area (Sq.Ft.): 4.31				Wheel Diameter (in): 20				Tip Speed: 5.24 x RPM				Max Motor Frame Size: 184T			

Performance certified is for installation type A: Free inlet, Free outlet. Power rating (Bhp) does not include transmission losses. Performance ratings do not include the effects of appurtenances. The sound ratings shown are loudness values in fan sones at 5 ft. (1.5 m) in a hemispherical free field calculated per AMCA Standard 301. Values shown are for installation type A: Free inlet hemispherical sone levels. FEI calculation is based on default motor calculation in accordance with ANS/AMCA Standard 208.

PRD 200-080 DIRECT DRIVE

RPM	Tip Speed	Max Sones	0.00"SP		0.25"SP		0.50"SP		0.62"SP		0.88"SP		1.12"SP		1.38"SP		1.62"SP		1.75"SP		2.00"SP		2.25"SP	
			CFM		CFM		CFM		CFM		CFM		CFM		CFM		CFM		CFM		CFM		CFM	
			BHP	FEI	BHP	FEI	BHP	FEI	BHP	FEI	BHP	FEI	BHP	FEI	BHP	FEI	BHP	FEI	BHP	FEI	BHP	FEI	BHP	FEI
350	1833	2.7	1455																					
			0.04	2.8																				
600	3142	7.6	2568		1961																			
			0.13	2.21	0.14	2.46																		
1391	7283	30	6148		5960		5741		5629		5403		5136		4826		4513		4316		3881		3246	
			2.04	0.4	2.55	0.48	2.38	0.66	2.38	0.73	2.39	0.85	2.41	0.96	2.43	1.05	2.43	1.11	2.42	1.13	2.38	1.16	2.27	1.14
Maximum RPM 1391					Max HP: 5.00				Outlet Area (Sq.Ft.): 4.31				Wheel Diameter (in): 20				Tip Speed: 5.24 x RPM				Max Motor Frame Size: 184T			

Performance certified is for installation type A: Free inlet, Free outlet. Power rating (Bhp) does not include transmission losses. Performance ratings do not include the effects of appurtenances. The sound ratings shown are loudness values in fan sones at 5 ft. (1.5 m) in a hemispherical free field calculated per AMCA Standard 301. Values shown are for installation type A: Free inlet hemispherical sone levels. FEI calculation is based on default motor calculation in accordance with ANS/AMCA Standard 208.

PRD 200-050 DIRECT DRIVE

RPM	Tip Speed	Max Sones	0.00"SP		0.25"SP		0.50"SP		0.75"SP		1.00"SP		1.25"SP		1.50"SP		1.75"SP		2.00"SP		2.25"SP		2.50"SP	
			CFM		CFM		CFM		CFM		CFM		CFM		CFM		CFM		CFM		CFM		CFM	
			BHP	FEI	BHP	FEI	BHP	FEI	BHP	FEI	BHP	FEI	BHP	FEI	BHP	FEI	BHP	FEI	BHP	FEI	BHP	FEI	BHP	FEI
350	1833	2.3	979																					
			0.05	2.08																				
600	3142	6.8	1708		1224																			
			0.12	1.7	0.13	1.95																		
900	4712	13.5	2561		2282		2006		1658															
			0.34	1.02	0.41	1.18	0.39	1.45	0.37	1.64														
1075	5629	18.3	3060		2842		2611		2359		2067		1660											
			0.53	0.79	0.62	0.93	0.64	1.15	0.65	1.31	0.64	1.42	0.62	1.44										
1533	8027	31	4415		4220		4053		3886		3719		3552		3357		3162		2939		2661		2298	
			1.6	0.38	1.48	0.59	1.63	0.69	1.72	0.8	1.78	0.89	1.82	0.97	1.85	1.05	1.87	1.11	1.87	1.15	1.85	1.17	1.78	1.17
Maximum RPM 1533					Max HP: 5.00				Outlet Area (Sq.Ft.): 4.31				Wheel Diameter (in): 20				Tip Speed: 5.24 x RPM				Max Motor Frame Size: 184T			

Performance certified is for installation type A: Free inlet, Free outlet. Power rating (Bhp) does not include transmission losses. Performance ratings do not include the effects of appurtenances. The sound ratings shown are loudness values in fan sones at 5 ft. (1.5 m) in a hemispherical free field calculated per AMCA Standard 301. Values shown are for installation type A: Free inlet hemispherical sone levels. FEI calculation is based on default motor calculation in accordance with ANS/AMCA Standard 208.

PRD 222-100 DIRECT DRIVE

RPM	Tip Speed	Max Sones	0.00"SP		0.25"SP		0.38"SP		0.62"SP		0.75"SP		1.00"SP		1.25"SP		1.38"SP		1.62"SP		1.75"SP		2.00"SP	
			CFM		CFM		CFM		CFM		CFM		CFM		CFM		CFM		CFM		CFM		CFM	
			BHP	FEI	BHP	FEI	BHP	FEI	BHP	FEI	BHP	FEI	BHP	FEI	BHP	FEI	BHP	FEI	BHP	FEI	BHP	FEI	BHP	FEI
350	2039	3.6	2001																					
			0.08	2.64																				
600	3495	9.6	3055		2025																			
			0.19	1.84	0.19	2.05																		
1250	7281	32	8447		8129		8020		7697		7483		7110		6684		6419		5834		5409		4394	
			2.85	0.38	2.6	0.61	2.72	0.65	2.93	0.77	3.01	0.84	3.08	0.94	3.11	1.02	3.11	1.06	3.07	1.11	3.01	1.13	2.8	1.12
Maximum RPM 1250					Max HP: 5.00				Outlet Area (Sq.Ft.): 5.36				Wheel Diameter (in): 22.25				Tip Speed: 5.83 x RPM				Max Motor Frame Size: 184T			

Performance certified is for installation type A: Free inlet, Free outlet. Power rating (Bhp) does not include transmission losses. Performance ratings do not include the effects of appurtenances. The sound ratings shown are loudness values in fan sones at 5 ft. (1.5 m) in a hemispherical free field calculated per AMCA Standard 301. Values shown are for installation type A: Free inlet hemispherical sone levels. FEI calculation is based on default motor calculation in accordance with ANS/AMCA Standard 208.

PRD 222-080 DIRECT DRIVE

RPM	Tip Speed	Max Sones	0.00"SP		0.25"SP		0.50"SP		0.75"SP		1.00"SP		1.25"SP		1.50"SP		1.75"SP		2.00"SP		2.25"SP		2.50"SP	
			CFM		CFM		CFM		CFM		CFM		CFM		CFM		CFM		CFM		CFM		CFM	
			BHP	FEI	BHP	FEI	BHP	FEI	BHP	FEI	BHP	FEI	BHP	FEI	BHP	FEI	BHP	FEI	BHP	FEI	BHP	FEI	BHP	FEI
350	2034	3.5	2003																					
			0.06	2.93																				
1313	7631	34	7922		7739		7461		7224		6934		6640		6291		5888		5431		4868		4099	
			2.87	0.35	3.88	0.39	3.42	0.59	3.4	0.71	3.41	0.82	3.43	0.92	3.45	1	3.45	1.07	3.43	1.11	3.36	1.12	3.21	1.1
Maximum RPM 1313					Max HP: 5.00				Outlet Area (Sq.Ft.): 5.36				Wheel Diameter (in): 22.2				Tip Speed: 5.81 x RPM				Max Motor Frame Size: 184T			

Performance certified is for installation type A: Free inlet, Free outlet. Power rating (Bhp) does not include transmission losses. Performance ratings do not include the effects of appurtenances. The sound ratings shown are loudness values in fan sones at 5 ft. (1.5 m) in a hemispherical free field calculated per AMCA Standard 301. Values shown are for installation type A: Free inlet hemispherical sone levels. FEI calculation is based on default motor calculation in accordance with ANS/AMCA Standard 208.

PRD 222-050 DIRECT DRIVE

RPM	Tip Speed	Max Sones	0.00"SP		0.25"SP		0.62"SP		0.88"SP		1.12"SP		1.50"SP		1.75"SP		2.00"SP		2.25"SP		2.62"SP		2.88"SP	
			CFM		CFM		CFM		CFM		CFM		CFM		CFM		CFM		CFM		CFM		CFM	
			BHP	FEI	BHP	FEI	BHP	FEI	BHP	FEI	BHP	FEI	BHP	FEI	BHP	FEI	BHP	FEI	BHP	FEI	BHP	FEI	BHP	FEI
350	2034	3.0	1344																					
			0.07	2.12																				
600	3487	8.3	2336		1830																			
			0.19	1.51	0.2	1.79																		
900	5231	16.4	3503		3199		2713		2335		1693													
			0.54	0.86	0.62	1.03	0.64	1.35	0.62	1.47	0.58	1.45												
1438	8358	35	5672		5454		5132		4953		4738		4451		4201		3950		3664		3126		2481	
			2.24	0.34	1.98	0.54	2.32	0.69	2.41	0.78	2.49	0.87	2.56	0.97	2.59	1.04	2.61	1.08	2.6	1.12	2.52	1.13	2.33	1.08
Maximum RPM 1438					Max HP: 5.00				Outlet Area (Sq.Ft.): 5.36				Wheel Diameter (in): 22.2				Tip Speed: 5.81 x RPM				Max Motor Frame Size: 184T			

Performance certified is for installation type A: Free inlet, Free outlet. Power rating (Bhp) does not include transmission losses. Performance ratings do not include the effects of appurtenances. The sound ratings shown are loudness values in fan sones at 5 ft. (1.5 m) in a hemispherical free field calculated per AMCA Standard 301. Values shown are for installation type A: Free inlet hemispherical sone levels. FEI calculation is based on default motor calculation in accordance with ANS/AMCA Standard 208.

PRD 245-100 DIRECT DRIVE

RPM	Tip Speed	Max Sones	0.00"SP		0.12"SP		0.25"SP		0.38"SP		0.50"SP		0.75"SP		0.88"SP		1.00"SP		1.12"SP		1.25"SP		1.38"SP	
			CFM		CFM		CFM		CFM		CFM		CFM		CFM		CFM		CFM		CFM		CFM	
			BHP	FEI	BHP	FEI	BHP	FEI	BHP	FEI	BHP	FEI	BHP	FEI	BHP	FEI	BHP	FEI	BHP	FEI	BHP	FEI	BHP	FEI
400	2566	6.6	8162		6670																			
			0.23	3.53	0.22	4.03																		
1175	7537	38	3656		3619		3562		3506		3450		3318		3262		3186		3111		3036		2961	
			3.81	0.14	3.86	0.17	3.94	0.2	4.01	0.22	4.07	0.25	4.18	0.3	4.22	0.32	4.26	0.34	4.29	0.36	4.31	0.38	4.33	0.39
Maximum RPM 1175					Max HP: 7.50				Outlet Area (Sq.Ft.): 5.36				Wheel Diameter (in): 24.5				Tip Speed: 6.41 x RPM				Max Motor Frame Size: 215T			

Performance certified is for installation type A: Free inlet, Free outlet. Power rating (Bhp) does not include transmission losses. Performance ratings do not include the effects of appurtenances. The sound ratings shown are loudness values in fan sones at 5 ft. (1.5 m) in a hemispherical free field calculated per AMCA Standard 301. Values shown are for installation type A: Free inlet hemispherical sone levels. FEI calculation is based on default motor calculation in accordance with ANS/AMCA Standard 208.

PRD 245-080 DIRECT DRIVE

RPM	Tip Speed	Max Sones	0.00"SP		0.12"SP		0.38"SP		0.50"SP		0.62"SP		0.88"SP		1.00"SP		1.12"SP		1.25"SP		1.50"SP		1.62"SP	
			CFM		CFM		CFM		CFM		CFM		CFM		CFM		CFM		CFM		CFM		CFM	
			BHP	FEI	BHP	FEI	BHP	FEI	BHP	FEI	BHP	FEI	BHP	FEI	BHP	FEI	BHP	FEI	BHP	FEI	BHP	FEI	BHP	FEI
400	2566	6.6	3317		2738																			
			0.12	2.45	0.15	2.25																		
1234	7915	41	10078		9923		9615		9461		9307		8999		8845		8639		8485		8074		7868	
			3.77	0.32	3.87	0.39	4.05	0.51	4.12	0.57	4.19	0.62	4.29	0.72	4.33	0.77	4.37	0.82	4.4	0.86	4.43	0.94	4.43	0.97
Maximum RPM 1234					Max HP: 7.50				Outlet Area (Sq.Ft.): 5.36				Wheel Diameter (in): 24.5				Tip Speed: 6.41 x RPM				Max Motor Frame Size: 215T			

Performance certified is for installation type A: Free inlet, Free outlet. Power rating (Bhp) does not include transmission losses. Performance ratings do not include the effects of appurtenances. The sound ratings shown are loudness values in fan sones at 5 ft. (1.5 m) in a hemispherical free field calculated per AMCA Standard 301. Values shown are for installation type A: Free inlet hemispherical sone levels. FEI calculation is based on default motor calculation in accordance with ANS/AMCA Standard 208.

PRD 245-050 DIRECT DRIVE

RPM	Tip Speed	Max Sones	0.00"SP		0.25"SP		0.62"SP		0.88"SP		1.25"SP		1.50"SP		1.75"SP		2.12"SP		2.38"SP		2.75"SP		3.00"SP	
			CFM		CFM		CFM		CFM		CFM		CFM		CFM		CFM		CFM		CFM		CFM	
			BHP	FEI	BHP	FEI	BHP	FEI	BHP	FEI	BHP	FEI	BHP	FEI	BHP	FEI	BHP	FEI	BHP	FEI	BHP	FEI	BHP	FEI
400	2566	5.7	2049		1014																			
			0.08	2.57	0.09	2.27																		
1351	8665	41	6996		6792		6466		6221		5853		5608		5322		4873		4506		3812		3118	
			3.27	0.28	3.37	0.4	3.5	0.56	3.58	0.66	3.66	0.78	3.69	0.85	3.71	0.91	3.7	0.97	3.66	1.01	3.5	1.02	3.23	0.99
Maximum RPM 1351					Max HP: 7.50				Outlet Area (Sq.Ft.): 5.36				Wheel Diameter (in): 24.5				Tip Speed: 6.41 x RPM				Max Motor Frame Size: 215T			

Performance certified is for installation type A: Free inlet, Free outlet. Power rating (Bhp) does not include transmission losses. Performance ratings do not include the effects of appurtenances. The sound ratings shown are loudness values in fan sones at 5 ft. (1.5 m) in a hemispherical free field calculated per AMCA Standard 301. Values shown are for installation type A: Free inlet hemispherical sone levels. FEI calculation is based on default motor calculation in accordance with ANS/AMCA Standard 208.

PRD 245-030 DIRECT DRIVE

RPM	Tip Speed	Max Sones	0.00"SP		0.38"SP		0.75"SP		1.25"SP		1.62"SP		2.00"SP		2.38"SP		2.75"SP		3.25"SP		3.62"SP		4.00"SP	
			CFM		CFM		CFM		CFM		CFM		CFM		CFM		CFM		CFM		CFM		CFM	
			BHP	FEI	BHP	FEI	BHP	FEI	BHP	FEI	BHP	FEI	BHP	FEI	BHP	FEI	BHP	FEI	BHP	FEI	BHP	FEI	BHP	FEI
400	2566	4.8	1254																					
			0.05	2.12																				
1783	11436	57	5585		5444		5267		5020		4808		4631		4419		4242		3960		3712		3465	
			4.48	0.16	4.54	0.26	4.62	0.36	4.73	0.49	4.81	0.58	4.88	0.64	4.94	0.7	4.99	0.74	5.04	0.8	5.05	0.83	5.04	0.85
Maximum RPM 1783					Max HP: 7.50				Outlet Area (Sq.Ft.): 5.36				Wheel Diameter (in): 24.5				Tip Speed: 6.41 x RPM				Max Motor Frame Size: 215T			

Performance certified is for installation type A: Free inlet, Free outlet. Power rating (Bhp) does not include transmission losses. Performance ratings do not include the effects of appurtenances. The sound ratings shown are loudness values in fan sones at 5 ft. (1.5 m) in a hemispherical free field calculated per AMCA Standard 301. Values shown are for installation type A: Free inlet hemispherical sone levels. FEI calculation is based on default motor calculation in accordance with ANS/AMCA Standard 208.

PRD 270-100 DIRECT DRIVE

RPM	Tip Speed	Max Sones	0.00"SP		0.12"SP		0.25"SP		0.38"SP		0.50"SP		0.75"SP		0.88"SP		1.00"SP		1.12"SP		1.25"SP		1.38"SP	
			CFM		CFM		CFM		CFM		CFM		CFM		CFM		CFM		CFM		CFM		CFM	
			BHP	FEI	BHP	FEI	BHP	FEI	BHP	FEI	BHP	FEI	BHP	FEI	BHP	FEI	BHP	FEI	BHP	FEI	BHP	FEI	BHP	FEI
400	2827	7.9	9664		7988																			
			0.41	2.51	0.37	3.01																		
1103	7797	41	4594		4547		4476		4405		4358		4216		4145		4051		3980		3885		3791	
			5.12	0.13	5.2	0.15	5.3	0.18	5.39	0.21	5.44	0.23	5.58	0.27	5.64	0.29	5.7	0.31	5.74	0.33	5.78	0.35	5.81	0.36
Maximum RPM 1103					Max HP: 10.00				Outlet Area (Sq.Ft.): 6.55				Wheel Diameter (in): 27				Tip Speed: 7.07 x RPM				Max Motor Frame Size: 215T			

Performance certified is for installation type A: Free inlet, Free outlet. Power rating (Bhp) does not include transmission losses. Performance ratings do not include the effects of appurtenances. The sound ratings shown are loudness values in fan sones at 5 ft. (1.5 m) in a hemispherical free field calculated per AMCA Standard 301. Values shown are for installation type A: Free inlet hemispherical sone levels. FEI calculation is based on default motor calculation in accordance with ANS/AMCA Standard 208.

PRD 270-080 DIRECT DRIVE

RPM	Tip Speed	Max Sones	0.00"SP		0.12"SP		0.38"SP		0.50"SP		0.62"SP		0.88"SP		1.00"SP		1.12"SP		1.25"SP		1.50"SP		1.62"SP	
			CFM		CFM		CFM		CFM		CFM		CFM		CFM		CFM		CFM		CFM		CFM	
			BHP	FEI	BHP	FEI	BHP	FEI	BHP	FEI	BHP	FEI	BHP	FEI	BHP	FEI	BHP	FEI	BHP	FEI	BHP	FEI	BHP	FEI
400	2827	7.9	4509		3787																			
			0.19	2.2	0.24	2.04																		
1158	8185	45	12657		12528		12141		11948		11754		11367		11173		10980		10786		10334		10141	
			5.06	0.29	5.16	0.34	5.4	0.47	5.51	0.53	5.6	0.59	5.74	0.69	5.8	0.73	5.85	0.77	5.89	0.81	5.94	0.89	5.95	0.92
Maximum RPM 1158					Max HP: 10.00				Outlet Area (Sq.Ft.): 6.55				Wheel Diameter (in): 27				Tip Speed: 7.07 x RPM				Max Motor Frame Size: 215T			

Performance certified is for installation type A: Free inlet, Free outlet. Power rating (Bhp) does not include transmission losses. Performance ratings do not include the effects of appurtenances. The sound ratings shown are loudness values in fan sones at 5 ft. (1.5 m) in a hemispherical free field calculated per AMCA Standard 301. Values shown are for installation type A: Free inlet hemispherical sone levels. FEI calculation is based on default motor calculation in accordance with ANS/AMCA Standard 208.

PRD 270-050 DIRECT DRIVE

RPM	Tip Speed	Max Sones	0.00"SP		0.38"SP		0.62"SP		1.00"SP		1.25"SP		1.62"SP		2.00"SP		2.25"SP		2.62"SP		2.88"SP		3.25"SP	
			CFM		CFM		CFM		CFM		CFM		CFM		CFM		CFM		CFM		CFM		CFM	
			BHP	FEI	BHP	FEI	BHP	FEI	BHP	FEI	BHP	FEI	BHP	FEI	BHP	FEI	BHP	FEI	BHP	FEI	BHP	FEI	BHP	FEI
400	2827	6.9	2748																					
			0.13	2.26																				
1268	8963	45	8789		8430		8173		7763		7455		7045		6532		6173		5506		4942		3763	
			4.39	0.26	4.58	0.42	4.69	0.51	4.82	0.65	4.9	0.73	4.96	0.82	4.99	0.9	4.98	0.94	4.89	0.99	4.75	1	4.27	0.96
Maximum RPM 1268					Max HP: 10.00				Outlet Area (Sq.Ft.): 6.55				Wheel Diameter (in): 27				Tip Speed: 7.07 x RPM				Max Motor Frame Size: 215T			

Performance certified is for installation type A: Free inlet, Free outlet. Power rating (Bhp) does not include transmission losses. Performance ratings do not include the effects of appurtenances. The sound ratings shown are loudness values in fan sones at 5 ft. (1.5 m) in a hemispherical free field calculated per AMCA Standard 301. Values shown are for installation type A: Free inlet hemispherical sone levels. FEI calculation is based on default motor calculation in accordance with ANS/AMCA Standard 208.

PRD 270-030 DIRECT DRIVE

RPM	Tip Speed	Max Sones	0.00"SP		0.38"SP		0.75"SP		1.25"SP		1.62"SP		2.00"SP		2.38"SP		2.75"SP		3.25"SP		3.62"SP		4.00"SP	
			CFM		CFM		CFM		CFM		CFM		CFM		CFM		CFM		CFM		CFM		CFM	
			BHP	FEI	BHP	FEI	BHP	FEI	BHP	FEI	BHP	FEI	BHP	FEI	BHP	FEI	BHP	FEI	BHP	FEI	BHP	FEI	BHP	FEI
400	2827	5.9	1684																					
			0.08	1.9																				
1544	10914	54	6473		6268		6064		5736		5490		5245		4999		4712		4343		4016		3688	
			4.73	0.17	4.81	0.29	4.89	0.39	5.02	0.53	5.11	0.61	5.18	0.68	5.25	0.73	5.3	0.78	5.33	0.83	5.32	0.85	5.27	0.86
Maximum RPM 1544					Max HP: 10.00				Outlet Area (Sq.Ft.): 6.55				Wheel Diameter (in): 27				Tip Speed: 7.07 x RPM				Max Motor Frame Size: 215T			

Performance certified is for installation type A: Free inlet, Free outlet. Power rating (Bhp) does not include transmission losses. Performance ratings do not include the effects of appurtenances. The sound ratings shown are loudness values in fan sones at 5 ft. (1.5 m) in a hemispherical free field calculated per AMCA Standard 301. Values shown are for installation type A: Free inlet hemispherical sone levels. FEI calculation is based on default motor calculation in accordance with ANS/AMCA Standard 208.

PRD 300-100 DIRECT DRIVE

RPM	Tip Speed	Max Sones	0.00"SP		0.12"SP		0.25"SP		0.38"SP		0.50"SP		0.75"SP		0.88"SP		1.00"SP		1.12"SP		1.25"SP		1.38"SP	
			CFM		CFM		CFM		CFM		CFM		CFM		CFM		CFM		CFM		CFM		CFM	
			BHP	FEI	BHP	FEI	BHP	FEI	BHP	FEI	BHP	FEI	BHP	FEI	BHP	FEI	BHP	FEI	BHP	FEI	BHP	FEI	BHP	FEI
400	3142	9.7	11561		9718		7093																	
			0.7	1.86	0.61	2.3	0.57	2.24																
1030	8090	45	5885		5824		5764		5673		5582		5431		5340		5249		5159		5068		4947	
			7.06	0.12	7.17	0.14	7.26	0.16	7.39	0.19	7.5	0.21	7.67	0.25	7.75	0.27	7.82	0.29	7.88	0.31	7.93	0.32	7.98	0.34
Maximum RPM 1030					Max HP: 10.00				Outlet Area (Sq.Ft.): 8.03				Wheel Diameter (in): 30				Tip Speed: 7.85 x RPM				Max Motor Frame Size: 215T			

Performance certified is for installation type A: Free inlet, Free outlet. Power rating (Bhp) does not include transmission losses. Performance ratings do not include the effects of appurtenances. The sound ratings shown are loudness values in fan sones at 5 ft. (1.5 m) in a hemispherical free field calculated per AMCA Standard 301. Values shown are for installation type A: Free inlet hemispherical sone levels. FEI calculation is based on default motor calculation in accordance with ANS/AMCA Standard 208.

PRD 300-080 DIRECT DRIVE

RPM	Tip Speed	Max Sones	0.00"SP		0.12"SP		0.38"SP		0.50"SP		0.62"SP		0.88"SP		1.00"SP		1.12"SP		1.25"SP		1.50"SP		1.62"SP	
			CFM		CFM		CFM		CFM		CFM		CFM		CFM		CFM		CFM		CFM		CFM	
			BHP	FEI	BHP	FEI	BHP	FEI	BHP	FEI	BHP	FEI	BHP	FEI	BHP	FEI	BHP	FEI	BHP	FEI	BHP	FEI	BHP	FEI
400	3142	9.7	6278		5358		3414																	
			0.32	1.91	0.39	1.8	0.39	1.76																
1082	8498	49	16223		16058		15644		15396		15148		14734		14486		14238		13990		13494		13246	
			6.99	0.27	7.12	0.32	7.41	0.43	7.56	0.49	7.69	0.55	7.88	0.63	7.96	0.68	8.04	0.73	8.1	0.77	8.18	0.84	8.21	0.87
Maximum RPM 1082					Max HP: 10.00				Outlet Area (Sq.Ft.): 8.03				Wheel Diameter (in): 30				Tip Speed: 7.85 x RPM				Max Motor Frame Size: 215T			

Performance certified is for installation type A: Free inlet, Free outlet. Power rating (Bhp) does not include transmission losses. Performance ratings do not include the effects of appurtenances. The sound ratings shown are loudness values in fan sones at 5 ft. (1.5 m) in a hemispherical free field calculated per AMCA Standard 301. Values shown are for installation type A: Free inlet hemispherical sone levels. FEI calculation is based on default motor calculation in accordance with ANS/AMCA Standard 208.

PRD 300-050 DIRECT DRIVE

RPM	Tip Speed	Max Sones	0.00"SP		0.38"SP		0.62"SP		1.00"SP		1.25"SP		1.62"SP		2.00"SP		2.25"SP		2.62"SP		2.88"SP		3.25"SP	
			CFM		CFM		CFM		CFM		CFM		CFM		CFM		CFM		CFM		CFM		CFM	
			BHP	FEI	BHP	FEI	BHP	FEI	BHP	FEI	BHP	FEI	BHP	FEI	BHP	FEI	BHP	FEI	BHP	FEI	BHP	FEI	BHP	FEI
400	3142	8.4	3775		1858																			
			0.23	1.9	0.24	1.87																		
1185	9307	50	11267		10806		10544		10018		9689		9163		8637		8177		7519		6927		5875	
			6.07	0.23	6.32	0.39	6.45	0.47	6.65	0.61	6.74	0.68	6.84	0.78	6.89	0.85	6.9	0.9	6.84	0.95	6.73	0.97	6.39	0.97
Maximum RPM 1185					Max HP: 10.00				Outlet Area (Sq.Ft.): 8.03				Wheel Diameter (in): 30				Tip Speed: 7.85 x RPM				Max Motor Frame Size: 215T			

Performance certified is for installation type A: Free inlet, Free outlet. Power rating (Bhp) does not include transmission losses. Performance ratings do not include the effects of appurtenances. The sound ratings shown are loudness values in fan sones at 5 ft. (1.5 m) in a hemispherical free field calculated per AMCA Standard 301. Values shown are for installation type A: Free inlet hemispherical sone levels. FEI calculation is based on default motor calculation in accordance with ANS/AMCA Standard 208.

PRD 300-030 DIRECT DRIVE

RPM	Tip Speed	Max Sones	0.00"SP		0.38"SP		0.75"SP		1.25"SP		1.62"SP		2.00"SP		2.38"SP		2.75"SP		3.25"SP		3.62"SP		4.00"SP	
			CFM		CFM		CFM		CFM		CFM		CFM		CFM		CFM		CFM		CFM		CFM	
			BHP	FEI	BHP	FEI	BHP	FEI	BHP	FEI	BHP	FEI	BHP	FEI	BHP	FEI	BHP	FEI	BHP	FEI	BHP	FEI	BHP	FEI
400	3142	7.2	2317		1027																			
			0.15	1.61	0.15	1.56																		
1442	11325	59	8293		8031		7768		7401		7139		6824		6561		6247		5774		5460		5040	
			6.52	0.16	6.64	0.27	6.75	0.37	6.9	0.49	7.01	0.57	7.12	0.64	7.2	0.69	7.28	0.74	7.34	0.79	7.36	0.82	7.33	0.84
Maximum RPM 1442					Max HP: 10.00				Outlet Area (Sq.Ft.): 8.03				Wheel Diameter (in): 30				Tip Speed: 7.85 x RPM				Max Motor Frame Size: 215T			

Performance certified is for installation type A: Free inlet, Free outlet. Power rating (Bhp) does not include transmission losses. Performance ratings do not include the effects of appurtenances. The sound ratings shown are loudness values in fan sones at 5 ft. (1.5 m) in a hemispherical free field calculated per AMCA Standard 301. Values shown are for installation type A: Free inlet hemispherical sone levels. FEI calculation is based on default motor calculation in accordance with ANS/AMCA Standard 208.

PENNBARRY PRODUCT SOLUTIONS

Commercial

- Roof & wall exhaust centrifugal fans
- Ceiling, wall, & inline centrifugal fans
- Roof supply centrifugal fans
- Square & round centrifugal fans
- Wall mounted axial fans
- Hooded roof axial fans
- Upblast roof axial fans
- Gravity ventilators
- Roof curbs

Industrial

- Freestanding centrifugal fans
- Industrial & material handling fans
- Tubular centrifugal inline fans
- Mixed flow centrifugal fans
- Plug & plenum fans
- Wall mounted propeller fans
- Tube axial fans
- Vane axial fans
- Bifurcator Fans
- Lab exhaust

Kitchen ventilation

- Make-up air units
- Exhaust fans

Energy recovery

- Outdoor units
- Indoor units

PennBarry is proud to be your preferred manufacturer of commercial and industrial fans and blowers. Learn how PennBarry can assist you in your next application by contacting your PennBarry Representative or visiting us on the web at www.pennbarry.com

PennBarry | www.pennbarry.com | pennbarrysales@pennbarry.com | Tel 972 212 4700 | Fax 972 212 4702

PennBarry reserves the right to make changes at any time, without notice, to models, construction, specifications, options and availability.
This document illustrates the appearance of PennBarry products at the time of publication. View the latest updates on the PennBarry website.

© 2021 PennBarry. All rights reserved. PRD - PRU Series October 2024.

PENNBARRY™