IndustraCon
Series 61, Arrangement 10

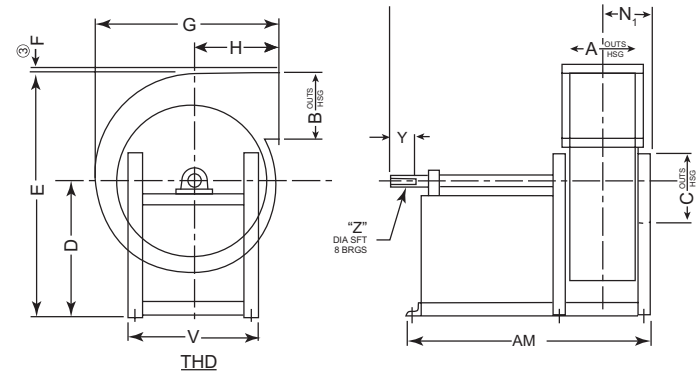

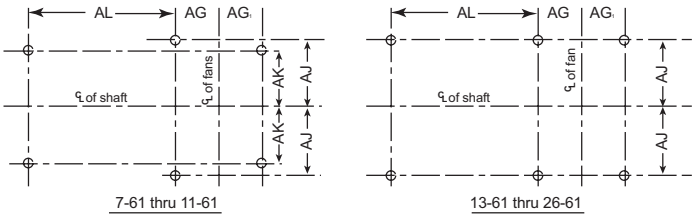

7/16 Dia. Base Holes, 7-61 — 15-61

9/16 Dia. Base Holes, 11-61 — 19-61

13/16 Dia. Base Holes, 21-61 — 26-61

Foundation Plan

Notes:
1. CW rotation shown; CCW rotation similar but opposite.
2. On specific sales orders, see Fan Data Schedule for performance and accessory information.
③ Discharge angles standard on sizes 26-61 only. (Hole punching optional.)
4. Field rotatable to size 21-61.

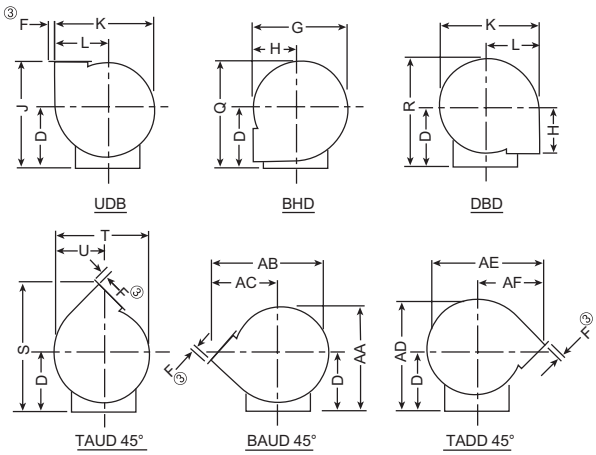

Dimensional Data

Size	A	B	C	D	E	F	G	H	J	K	L	N_1	Q	R	S	T	U	V	Y	"Z" OT-15, AH-15, WT-15		"Z" OT-17, AH-17, WT-17	
																				SFT	KWY	SFT	KWY
7-61	6 1/8	6 13/16	7	14 1/2	25 1/16	—	19	9 5/16	23 13/16	19 5/16	10 9/16	5 9/16	23 1/4	24 3/16	28 9/16	18 5/8	10	18 1/2	2 1/2	1 3/16	1/4 X 1/8	—	—
9-61	7 3/4	8 5/8	9	19 3/4	33 1/4	—	23	10 5/8	30 3/8	24 11/16	13 1/2	6 3/8	30 15/16	32 1/8	36 3/4	23 1/2	12 7/8	22 1/2	2 1/2	1 7/16	3/8 X 3/16	1 7/16	3/8 X 3/16
11-61	9 7/16	10 9/16	11	26	42 7/16	—	28 1/16	13	39	30 1/8	16 7/16	7 3/4	39 11/16	41 1/16	46 7/8	28 3/4	15 3/4	26	2 1/2	1 11/16	3/8 X 3/16	1 15/16	1/2 X 1/4
13-61	11 1/4	12 7/16	13	28	47 7/16	—	33 3/16	15 3/8	43 3/8	35 5/8	19 7/16	8 5/8	44 3/16	45 13/16	52 5/8	34	18 5/8	27 1/4	3	1 15/16	1/2 X 1/4	1 15/16	1/2 X 1/4
15-61	12 15/16	14 5/16	15	29	51 3/8	—	38 1/4	17 3/4	46 3/4	41	22 2/3	9 1/2	47 5/8	49 1/2	57 3/8	39 1/8	21 7/16	32 3/4	3 1/2	1 15/16	1/2 X 1/4	2 3/16	1/2 X 1/4
17-61	14 5/8	16 3/8	17	30 1/4	55 11/16	—	43 7/16	20 1/8	50 3/8	46 5/8	25 7/16	10	51 7/16	53 9/16	62 1/2	44 1/2	24 3/8	29 1/4	3 1/2	2 3/16	1/2 X 1/4	2 3/16	1/2 X 1/4
19-61	16 1/4	18 3/16	19	31 1/4	59 9/16	—	48 3/8	22 7/16	53 11/16	51 7/8	28 5/16	10 7/8	54 13/16	57 3/16	67 1/8	49 3/4	27 1/8	31	3 1/2	2 3/16	1/2 X 1/4	2 7/16	5/8 X 5/16
21-61	17 15/16	20 1/8	21	36 1/2	67 13/16	—	51 9/16	23	59 1/2	57 1/8	31 5/16	12 1/4	62 5/16	65 1/16	74 7/8	54 3/8	29 15/16	37	4 1/2	2 7/16	5/8 X 5/16	2 11/16	5/8 X 5/16
23-61	19 5/8	22	23	37 1/2	71 13/16	—	57 1/4	26	63 1/2	62 1/2	34 5/16	13 1/16	65 11/16	68 3/4	79 7/8	59 7/16	32 13/16	40	4 1/2	2 11/16	5/8 X 5/16	2 15/16	3/4 X 3/8
26-61	22 1/8	24 13/16	26	41 3/4	80 3/8	2 1/2	64 1/4	28 1/2	70 1/4	70 1/2	38 5/8	14 5/16	73 5/8	77	89 9/16	67 3/4	37 3/16	44 1/2	5	2 11/16	5/8 X 5/16	2 15/16	3/4 X 3/8

Size	Z						AA	AB	AC	AD	AE	AF	AG	AG1	AJ	AK	AL	AM	Max. Mtr. Frame	
	OT-20		WTH-15		OTH-15															
	SFT	KWY	SFT	KWY	SFT	KWY													ODP	TEFC
7-61	—	—	1 3/16	1/4 X 1/8	1 3/16	1/4 X 1/8	22 13/16	23 5/16	14 1/16	24 1/2	23 5/16	14 1/16	3 15/16	3 15/16	8 5/8	6 5/8	16 1/4	25 3/8	145T	145T
9-61	—	—	1 7/16	3/8 X 3/16	1 7/16	3/8 X 3/16	30 3/8	28 3/4	17	32 5/8	28 3/4	17	5	5	10 3/8	8	19 7/16	31 3/16	184T	184T
11-61	2 3/16	1/2 X 1/4	1 11/16	3/8 X 3/16	1 15/16	1/2 X 1/4	39	35 1/4	20 7/8	41 3/4	38 1/4	20 7/8	5 7/8	5 7/8	12 1/8	9 5/8	21	34 1/2	215T	213T
13-61	2 3/16	1/2 X 1/4	1 15/16	1/2 X 1/4	2 3/16	1/2 X 1/4	43 3/8	41 5/8	24 5/8	46 5/8	41 5/8	24 5/8	6 15/16	6 3/4	10 3/4	—	25 1/2	40 15/16	256T	254T
15-61	2 7/16	5/8 X 5/16	1 15/16	1/2 X 1/4	2 7/16	5/8 X 5/16	46 11/16	47 15/16	28 3/8	50 7/16	47 15/16	28 3/8	7 13/16	7 5/8	13 7/8	—	26	43 3/16	256T	254T
17-61	2 7/16	5/8 X 5/16	1 15/16	1/2 X 1/4	2 7/16	5/8 X 5/16	50 3/8	54 1/2	32 1/4	54 5/8	54 1/2	32 1/4	8 7/8	8 7/8	13 1/2	—	25	45	254T	215T
19-61	2 11/16	5/8 X 5/16	2 7/16	5/8 X 5/16	2 11/16	5/8 X 5/16	53 7/8	60 11/16	35 7/8	58 3/8	60 11/16	35 7/8	9 3/4	9 3/4	14 3/8	—	26	47 3/4	256T	254T
21-61	2 15/16	3/4 X 3/8	2 7/16	5/8 X 5/16	2 15/16	3/4 X 3/8	60 15/16	65 5/8	38 3/8	66 7/16	65 5/8	38 3/8	10 7/8	10 7/8	13 1/8	—	30	54 1/2	286T	284T
23-61	3 7/16	7/8 X 7/16	2 11/16	5/8 X 5/16	2 15/16	3/4 X 3/8	64 1/4	72 1/16	42 3/8	70 5/16	72 1/16	42 3/8	11 7/16	11 11/16	14 5/8	—	30	55 7/8	286T	284T
26-61	3 7/16	7/8 X 7/16	2 11/16	3/4 X 3/8	3 7/16	7/8 X 7/8	72 5/16	81 3/4	48 13/16	78 15/16	81 3/4	47 13/16	12 11/16	12 15/16	16 7/8	—	36	64 3/8	326T	324T

Notes: Dimensions (inches) should not be used for construction. Certified drawinigs are available upon request.

PENN BARRY™

1401 North Plano Road, Richardson, TX 75081
Ph: 972.234.3202 Fax: 972.497.0468
www.PennBarry.com

Submittal Sheet
IndustraCon
Series 61, Arrangement 10

This drawing illustrates our understanding of order requirements. When approved, it represents details for fabrication, as such, PennBarry will not be responsible for revisions in the field or other changes after release for fabrication. Published and protected by PennBarry, Richardson, TX. All rights reserved. May not be reproduced partially or in full without permission from the publisher. No rights conveyed to manufacture partially or in full, use or sell either the method of construction represented or any invention in any way related thereto.

Form ES-IND-61.10
Revised March 2005