IndustraCon

Series 61, Arrangements 1 and 9

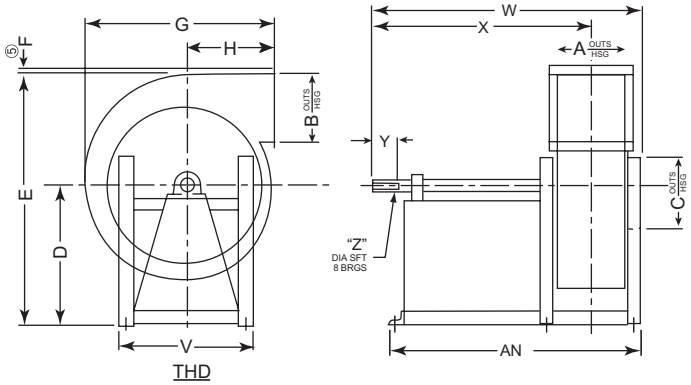

Notes:

1. CW rotation shown; CCW rotation similar but opposite.
2. On specific sales orders, see Fan Data Schedule for performance and accessory information.
3. On Arrangement No. 9, the standard motor position is left side for CW units and right side for CCW units.

④ Maximum motor frame sizes shown refer only to Arrangement No. 9.

⑤ Discharge angles standard on sizes 26-61 thru 41-61 only.

⑥ Design 2 employs longer pedestal for larger motors.

⑦ **On Design 2 fans, add dimension "AM" to centerline height. Dimensions affected are D, E, J, Q, R, S, AA and AD.**

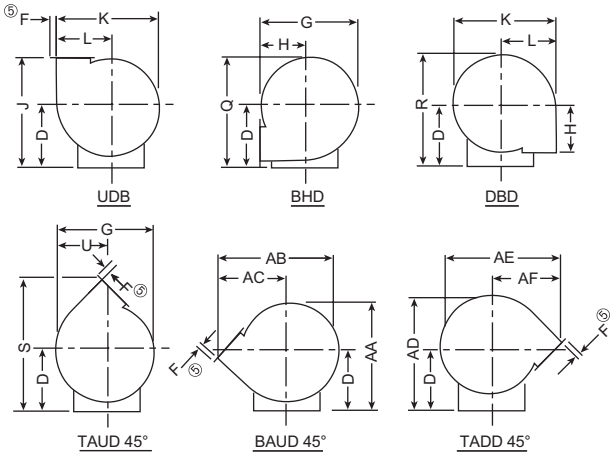

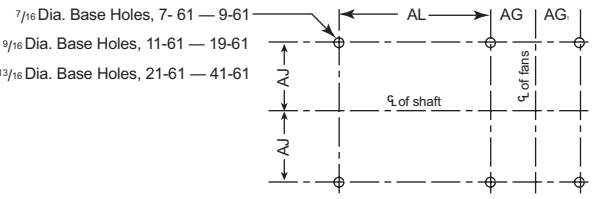

Foundation Plan

Dimensional Data

Size	A	B	C	D ⑦	E ⑦	F	G	H	J ⑦	K	L	Q ⑦	R ⑦	S ⑦	T	U	V	Design 1 W	Design 1 X	Design 1 Max. Mtr. Frame ④ ODP	Design 1 Max. Mtr. Frame ④ TEFC	Design 2 ⑥ W	Design 2 ⑥ X	Design 2 ⑥ Max. Mtr. Frame ④ ODP	Design 2 ⑥ Max. Mtr. Frame ④ TEFC
7-61	6 1/8	6 13/16	7	14 1/4	24 13/16	—	19	9 5/16	23 9/16	19 5/16	10 9/16	23	23 15/16	28 9/16	18 5/16	10	14	25 3/8	20 11/16	145T	145T	30 3/8	25 11/16	215T	215T
9-61	7 3/4	8 5/8	9	15 1/4	28 3/4	—	23	10 5/8	25 7/8	24 11/16	13 1/2	26 7/16	27 5/8	32 1/4	23 1/2	12 7/8	17 1/2	27 1/2	22	145T	145T	37 3/8	31 7/8	256T	256T
11-61	9 7/16	10 9/16	11	18 3/4	35 3/16	—	28 /1/16	13	31 3/4	30 1/8	16 7/16	32 7/16	33 13/16	39 5/8	28 3/4	15 3/4	19 7/8	33 7/8	26 15/16	184T	184T	41 1/4	34 5/16	256T	256T
13-61	11 1/4	12 7/16	13	21 3/4	41 3/16	—	33 3/16	15 3/8	37 1/8	35 5/8	19 7/16	37 15/16	39 9/16	46 3/8	34	18 5/8	23	36 7/8	29 1/16	215T	213T	45 5/8	37 13/16	286T	284T
15-61	12 15/16	14 5/16	15	25 1/4	47 5/8	—	38 1/4	17 3/4	43	41	22 3/8	43 7/8	45 3/4	53 5/8	39 1/8	21 7/16	26	45 1/8	35 15/16	256T	254T	50 5/8	41 7/16	286T	286T
17-61	14 5/8	16 3/8	17	28 1/4	53 11/16	—	43 7/16	20 1/8	48 3/8	46 5/8	25 7/16	49 7/16	51 9/16	60 1/2	44 1/2	24 3/8	29 1/4	48 3/4	38 3/4	284T	256T	54 3/4	44 3/4	326T	324T
19-61	16 1/4	18 3/16	19	31 1/4	59 9/16	—	48 3/8	22 7/16	53 11/16	51 7/8	28 5/16	54 13/16	57 3/16	67 1/8	49 3/4	27 1/8	31	54	43 1/8	326T	284T	58 1/4	47 3/8	365T	326T
21-61	17 15/16	20 1/8	21	34 1/2	65 13/16	—	51 9/16	23	57 1/2	57 1.8	31 5/16	60 5/16	63 1/16	72 7/8	54 3/8	29 15/16	37	57 3/4	45 1/2	364T	286T	62	49 3/4	365T	365T
23-61	19 5/8	22	23	37 1/2	71 13/16	—	57 1/4	26	63 1/2	62 1/2	34 5/16	65 11/16	68 3/4	79 7/8	59 7/16	32 13/16	40	61 1/8	48 1/16	365T	324T	63 7/8	50 13/16	365T	365T
26-61	22 1/8	24 13/16	26	41 3/4	80 3/8	2 1/2	64 3/4	29	70 3/4	70 1/2	38 5/8	73 5/8	77	89 9/16	67 3/4	37 3/16	44 1/2	65 3/8	51 1/16	404T	364T	69 5/8	55 5/18	405T	404T
29-61	24 5/8	27 11/16	29	46 1/2	89 13/16	2 1/2	72 5/16	32 5/16	78 13/16	78 15/16	43 5/16	82 1/8	86	99 1/8	74 15/16	41 1/4	49 1/2	68 7/8	53 5/16	405T	365T	72 1/8	56 9/18	405T	404T
33-61	28	31 1/2	33	52 1/2	101 3/4	2 1/2	81 7/8	36 1/2	89	89 3/4	49 1/4	93	97 3/8	112 3/4	85 7/16	47 1/16	59	78 1/4	60	405T	404T	—	—	—	—
37-61	31 1/2	35 3/16	37	58 1/2	113 5/8	2 1/2	91 1/2	40 3/4	99 1/4	100 1/2	55 1/8	103 7/8	108 3/4	126 1/16	95 5/8	52 11/16	60	83 7/16	63 5/16	405T	405T	—	—	—	—
41-61	34 13/16	38 15/16	41	64 1/2	125 1/2	2 1/2	101 1/2	45 3/8	109 7/8	111 3/16	61	114 11/16	120 1/8	139 3/8	105 7/8	28 3/16	65 1/2	99	76 3/16	405T	405T	—	—	—	—

Size	Y	Z OT-15, AH-15, WT-15 SFT	Z OT-15, AH-15, WT-15 KWY	Z OT-17, AH-17, WT-17 SFT	Z OT-17, AH-17, WT-17 KWY	Z OT-20 SFT	Z OT-20 KWY	Z WTH-15 SFT	Z WTH-15 KWY	Z OTH-15 SFT	Z OTH-15 KWY	AA ⑦	AB	AC	AD ⑦	AE	AF	AG	AG_1	AJ	AL Design 1	AL Design 2 ⑥	AM ⑦	AN Design 1	AN Design 2
7-61	3 1/2	1 3/16	1/4 X 1/8	—	—	—	—	1 3/8	1/4 X 1/8	1 3/16	1/4 X 1/8	22 9/16	23 5/16	14 1/16	24 1/4	23 5/16	14 1/16	4 1/16	4 1/16	6 3/8	13 3/4	18 3/4	7 3/4	23 1/8	28 1/8
9-61	4	1 7/16	3/8 X 3/16	1 7/16	3/8 X 3/16	—	—	1 7/16	3/8 X 3/16	1 7/16	3/8 X 3/16	25 7/8	28 3/4	17	28 1/8	28 3/4	17	4 7/8	4 7/8	8 1/8	13 3/4	23 5/8	8 3/4	24 3/4	34 5/8
11-61	5	1 11/16	3/8 X 3/16	1 15/16	1/2 X 1/4	2 3/16	1/2 X 1/4	1 11/16	3/8 X 3/16	1 15/16	1/2 X 1/4	31 3/4	35 1/4	20 7/8	34 1/2	35 1/4	20 7/8	6 1/16	6 1/16	9 1/16	16 1/2	23 7/8	6	30 3/8	37 3/4
13-61	5	1 15/16	1/2 X 1/4	1 15/16	1/2 X 1/4	2 3/16	1/2 X 1/4	1 15/16	1/2 X 1/4	2 3/16	1/2 X 1/4	37 1/8	41 5/8	24 5/8	40 3/8	41 5/8	24 5/8	6 15/16	6.937	10 5/8	17 3/4	26 1/2	5 1/2	33 3/8	42 1/8
15-61	6	1 15/16	1/2 X 1/4	2 3/16	1/2 X 1/4	2 7/16	5/8 X 5/16	1 15/16	1/2 X 1/4	2 7/16	5/8 X 5/16	42 15/16	47 15/16	28 3/8	46 11/16	47 15/16	28 3/8	8 1/16	8 1/16	11 7/8	22 1/2	28	3	40 7/8	46 3/8
17-61	6	2 3/16	1/2 X 1/4	2 3/16	1/2 X 1/4	2 7/16	5/8 X 5/16	1 15/16	1/2 X 1/4	2 7/16	5/8 X 5/16	48 3/8	54 1/2	32 1/4	52 5/8	54 1/2	32 1/4	8 7/8	8 7/8	13 1/2	24 1/2	30 1/2	3	44 1/2	50 1/2
19-61	7	2 3/16	1/2 X 1/4	2 7/16	5/8 X 5/16	2 11/16	5/8 X 5/16	2 7/16	5/8 X 5/16	2 11/16	5/8 X 5/16	53 7/8	60 11/16	35 7/8	58 3/8	60 11/16	35 7/8	9 3/4	9 3/4	14 3/8	27	31 1/4	2	48 3/4	53
21-61	7	2 7/16	5/8 X 5/16	2 11/16	5/8 X 5/16	2 15/16	3/4 X 3/8	2 7/16	5/8 X 5/16	2 15/16	3/4 X 3/8	58 15/16	65 5/8	38 3/8	64 7/16	65 5/8	38 3/8	10 7/8	10 7/8	17 1/8	28 1/2	32 3/4	—	53	57 1/4
23-61	7 1/2	2 11/16	5/8 X 5/16	2 15/16	3/4 X 3/8	3 7/16	7/8 X 7/16	2 11/16	5/8 X 5/16	2 15/16	3/4 X 3/8	64 1/4	72 1/16	42 3/8	70 5/16	72 1/16	42 3/8	11 7/16	11 11/16	18 5/8	30	32 3/4	—	55 7/8	58 5/8
26-61	8	2 11/16	5/8 X 5/16	2 15/16	3/4 X 3/8	3 7/16	7/8 X 7/16	2 15/16	3/4 X 3/8	3 7/16	7/8 X 7/16	72 5/16	81 3/4	47 13/16	78 15/16	81 3/4	47 13/16	12 11/16	12 15/16	20 7/8	31	35 1/4	—	59 3/8	63 5/8
29-61	8	2 15/16	3/4 X 3/8	3 7/16	7/8 X 7/16	3 15/16	1 X 1/2	3 7/16	7/8 X 7/16	3 15/16	1 X 1/2	80 3/16	90 1/8	52 5/8	87 3/4	90 1/8	52 5/8	13 15/16	14 3/16	23 3/8	32	35 1/4	—	62 7/8	66
33-61	9	3 7/16	7/8 X 7/16	3 15/16	1 X 1/2	4 7/16	1 X 1/2	3 15/16	1 X 1/2	3 15/16	1 X 1/2	90 7/8	103	60 1/4	99 9/16	103	60 1/4	16 1/8	16 3/8	25 5/8	36	—	—	72 1/4	—
37-61	9	3 15/16	1 X 1/2	3 15/16	1 X 1/2	4 7/16	1 X 1/2	3 15/16	1 X 1/2	4 7/16	1 X 1/2	101 7/16	115 5/16	67 9/16	111 3/16	115 5/16	67 9/16	17 7/8	18 1/4	28 5/8	37 9/16	—	—	77 7/16	—
41-61	9	4 7/16	1 X 1/2	4 7/16	1 X 1/2	4 15/16	1 1/4 X 5/8	4 7/16	1 X 1/2	4 15/16	1 1/4 X 5/8	112 3/16	127 7/8	74 7/8	122 11/16	127 7/8	74 7/8	20 1/16	20 7/16	31 1/8	48 3/4	—	—	94	—

Notes: Dimensions (inches) should not be used for construction. Certified drawinigs are available upon request.

PENN BARRY™

1401 North Plano Road, Richardson, TX 75081
Ph: 972.234.3202 Fax: 972.497.0468
www.PennBarry.com

Submittal Sheet

IndustraCon

Series 61, Arrangements 1 and 9

This drawing illustrates our understanding of order requirements. When approved, it represents details for fabrication, as such, PennBarry will not be responsible for revisions in the field or other changes after release for fabrication. Published and protected by PennBarry, Richardson, TX. All rights reserved. May not be reproduced partially or in full without permission from the publisher. No rights conveyed to manufacture partially or in full, use or sell either the method of construction represented or any invention in any way related thereto.

Form ES-IND-61.1,9
Revised March 2005